FRENCH FITNESS

2025 FITNESS EQUIPMENT CATALOGUE



Contents

Free Weights 01

Dumbbells	5
Weight Plates & Kettlebells	6
Barbells	8

Weight bars & Collars 02

Bars & Collars	12

Storage Racks 03

Storage Racks	16

Benches 04

Benches	25
Stretch / VKR Machines	34
Power Sled	36
GHD	37



Contents

Cages, Racks & Rigs 05

Cages / Racks 38

Racks & Rigs 41

Cable Attachments 68

Weightlifting Platform 73

Plate Loaded 06

Lower Body 74

Upper Body 86

Multi Functional Smith Machines 104

Smith Machines (Single Function) 108

Dual Function 110

Multi Function 111

Selectorized 07

Upper Body 112

Mid & Upper Back 125



Contents

Selectorized 07

Lower Body 126

Dual Function 133

Cable Cross / Functional Trainers 140

Gym Systems 08

Single Stack 147

Multi Stacks 148

Pilates Reformer 154

Cardio 09

Ellipticals / Exercise Bikes 155

Seated Ellipticals / Total Body Ergometers / UBE's 161

Stair Climbers / Steppers 162

Treadmills 163

Air Bike / SKI / Rower 166



Contents

Flooring 10

Flooring 167

Gym Accessories 11

Jump Box 170

Weighted Bags 173

Bands / Rope 174

Yoga / Workout Mats 178

Exercise Balls 179

Landmine 188

Fitness Bars 190

Gym Accessories - Others 191

FRENCH FITNESS

01

FREE WEIGHTS

FF-HVD



Colorful Hex Vinyl Dumbbell

SINGLE: 1/2/3/4/5/6/7/8/9/10/12/15 lbs

SET: 1-10 lbs / 1-15 lbs / 1-10 lbs + Rack

FF-RCHD



Rubber Coated Hex Dumbbell

SINGLE:

2.5/5/7.5/10/12.5/15/17.5/20/22.5/27.5/30/35/40/45/50/55/60/65/70/75/80/85/90/95/100/105/110/115/120/125/130/135/140/145/150 lbs

SET:

2.5-22.5 lbs / 2.5-25 lbs / 5-50 lbs / 5-70 lbs / 5-75 lbs / 5-100 lbs / 55-75 lbs / 55-100 lbs / 80-100 lbs / 105-120 lbs

SET W/RACK OR BENCH:

5-50 lbs + Rack
5-50 lbs + Rack + Bench
5-75 lbs + Rack
5-75 lbs + Rack + Bench
5-100 lbs + Rack
5-100 lbs + Rack + Bench

FF-URPSD



Urethane Round Pro Style Dumbbell

SINGLE:

2.5/5/10/15/20/25/30/35/40/45/50/55/60/65/70/75/80/85/90/95/100/105/110/115/120/125/130/135/140/145/150 lbs

SET:

5-50 lbs / 5-60 lbs / 5-75 lbs / 5-100 lbs / 55-75 lbs / 55-100 lbs

FF-U8SHD



Urethane 8 Sided Hex Dumbbell

SINGLE:

2.5/5/7.5/10/12.5/15/17.5/20/22.5/25/27.5/30/35/40/45/50/55/60/65/70/75/80/85/90/95/100/105/110/115/120/125/130/135/140/145/150 lbs

SET:

5-50 lbs / 5-60 lbs / 5-75 lbs / 5-100 lbs / 55-100 lbs / 105-130 lbs

FF-5-80-ADS



5-80 lb Adjustable Dumbbell, Set of 2

SINGLE:

Adjustable from 5 to 80 lbs

TOTAL WEIGHT:

80 lbs Each, 160 lbs for Set

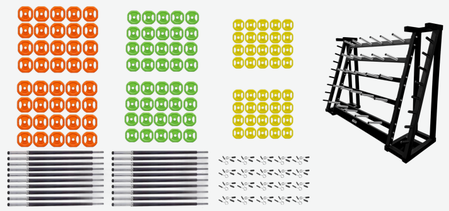

FF-BP-20SBPR

20 Set Aerobic Bar & Plate Package w/Rack



FF-CUBP-C

Competition Urethane Bumper Plate Colored

SINGLE: 2.5/5/10/15/25/35/45/55 lbs
SETS: 210/260/300/320/340/350 lbs



FF-BP-1BP-20KG

Aerobic Barbell & Weight Plate Set

WEIGHT PLATES: 1.25 kg/2.5 kg/5 kg with Spring Collars (pair)
BAR: 55"L x 1"R



FF-CUBP-B

Competition Urethane Bumper Plate

SINGLE: 2.5/5/10/15/25/35/45/55 lbs
SETS: 210/260/300/320/340/350 lbs



FF-COBP

Olympic Colored Bumper Plate

SINGLE: 10/15/25/35/45/55 lbs
SET: 190/230/260/320/340/370/680 lbs



FF-SCIWP

Standard Cast Iron 1" Weight Plate

SINGLE: 2.5/5/10/25/35/45 lbs
SETS: 190/260/350/450 lbs



FF-BOBP

Olympic Black Bumper Plate Blank

SINGLE: 10/15/25/35/45/55 lbs
SET: 190/230/260/320/340/370/680 lbs



FF-U120WP450-V2

Urethane Olympic Weight Plate V2

SINGLE: 2.5/5/10/25/35/45 lbs
SET: 190/260/350/450 lbs



FF-COBP

Olympic Colored Bumper Plate Blank

SINGLE 10/15/25/35/45/55 lbs

SET 190/230/260/370 lbs



FF-CIKB

Cast Iron Kettlebell

SINGLE 5/10/15/20/25/30/35/40/45/50/55/60/65/70/75/80/85/90/95/100 lbs

SETS 5-30/5-50/5-60 lbs



FF-CIOWP

Cast Iron Olympic Weight Plate V1

SINGLE 2.5/5/10/25/35/45/100 lbs

SET 190/260/350/450 lbs

SET W/ 7FT BAR 235/305/395 lbs



FF-COP

Vinyl Kettlebell

SINGLE 5/8/10/12/15/20/25/30/35/40/45/50/55/60/65/70 lbs

SET 5-20/5-30/5-50/5-60/5-70 lbs

FF-RGOP



Rubber Grip Olympic Plate Black

SINGLE 2.5/5/10/25/35/45 lbs

SETS 50/70/100/120/140/170/190/260/350/450 lbs

SETS W/ 7FT BAR 235/305/395 lbs

SETS W/ 7FT BAR + BENCH 235/305/395 lbs

SETS W/ 7FT BAR + RACK + BENCH 235/305/395 lbs

FF-COP



Colored Rubber Grip Olympic Plate

SINGLE 2.5/5/10/25/35/45 lbs

SET 50/70/100/120/140/170/190/260/350/450 lbs

SETS W/ 7FT BAR 235/305/395 lbs

SETS W/ 7FT BAR + BENCH 235/305/395 lbs

SETS W/ 7FT BAR + RACK + BENCH 305 lbs

FF-OBP



Olympic Bumper Plate Crumb Rubber

SINGLE 2.5/5/10/25/35/45 lbs

SET 50/70/100/120/140/170/190/260/350/450 lbs

SETS W/ 7FT BAR 235/305/395 lbs

FF-EZCURLBB



EZ Curl Urethane Barbell Bar Set, 20-110 lbs

MATERIAL:
Solid Steel Heads with
Black Urethane Plating

BARBELL HEAD DIAMETER:
15-20 lbs - 4.9" (124 mm)
25-40 lbs - 6.1" (155 mm)
50-70 lbs - 7" (179 mm)
80-120 lbs - 7.8" (198 mm)

HANDLE DIAMETER:
1.25" (32 mm) (Non-Knurling)

HANDLE DIAMETER:
1.27" (32.3 mm) (Knurling)

HANDLE LENGTH:
35.4" (900 mm)

WEIGHT:
20-110 lbs

FF-EZCURLBB25-115

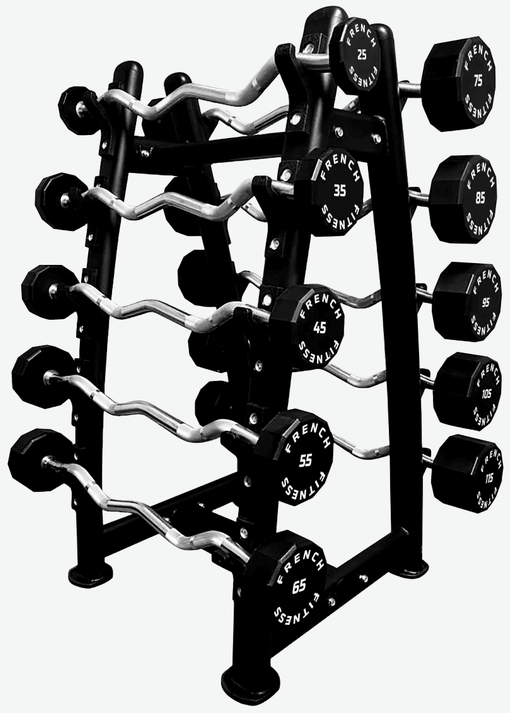

EZ Curl Urethane Barbell Bar Set, 25-115 lbs

MATERIAL:
Solid Steel Heads with
Black Urethane Plating

BARBELL HEAD DIAMETER:
25-40 lbs - 6.1" (155 mm)
45-70 lbs - 7" (179 mm)
75-120 lbs - 7.8" (198 mm)
125 lbs - 8.3" (210 mm)

HANDLE DIAMETER:
1.25" (32 mm) (Non-Knurling)

HANDLE DIAMETER:
1.27" (32.3 mm) (Knurling)

HANDLE LENGTH:
35.4" (900 mm)

WEIGHT:
25-115 lbs

FF-EZCURLBB-20-60



EZ Curl Urethane Barbell Bar Set of 5 (20-60 lbs)

MATERIAL:
Solid Steel Heads with
Black Urethane Plating

BARBELL HEAD DIAMETER:
15-20 lbs - 4.9" (124 mm)
25-40 lbs - 6.1" (155 mm)
50-70 lbs - 7" (179 mm)

HANDLE DIAMETER:
1.25" (32 mm) (Non-Knurling)

HANDLE DIAMETER:
1.27" (32.3 mm) (Knurling)

HANDLE LENGTH:
35.4" (900 mm)

WEIGHT:
20-60 lbs

FF-EZCURLBB-25-65



EZ Curl Urethane Barbell Bar Set of 5 (25-65 lbs)

MATERIAL:
Solid Steel Heads with
Black Urethane Plating

BARBELL HEAD DIAMETER:
25-40 lbs - 6.1" (155 mm)
45-70 lbs - 7" (179 mm)

HANDLE DIAMETER:
1.25" (32 mm) (Non-Knurling)

HANDLE DIAMETER:
1.27" (32.3 mm) (Knurling)

HANDLE LENGTH:
35.4" (900 mm)

WEIGHT:
25-65 lbs

FF-EZCURLBB

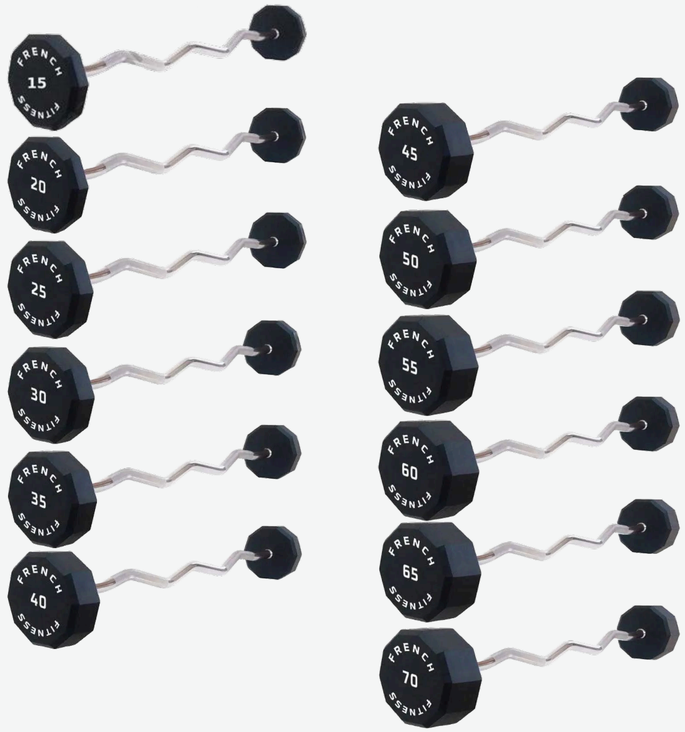

EZ Curl Urethane Barbell – Single

MATERIAL:
Solid Steel Heads with
Black Urethane Plating

BARBELL HEAD DIAMETER:
15-20 lbs - 4.9" (124 mm)
25-40 lbs - 6.1" (155 mm)
45-70 lbs - 7" (179 mm)
75-120 lbs - 7.8" (198 mm)
125 lbs - 8.3" (210 mm)

HANDLE DIAMETER:
1.25" (32 mm) (Non-Knurling)

HANDLE DIAMETER:
1.27" (32.3 mm) (Knurling)

HANDLE LENGTH:
35.4" (900 mm)

WEIGHT:
Single:
15/20/25/30/35/40/45/50/55/60/65/70/75/80/85/90/95/100/105/110/115/120/125 lbs

FF-STRBB



Straight Urethane Barbell – Single

MATERIAL:
Solid Steel Heads with
Black Urethane Plating

BARBELL HEAD DIAMETER:
15-20 lbs - 4.9" (124 mm)
25-40 lbs - 6.1" (155 mm)
45-70 lbs - 7" (179 mm)
75-120 lbs - 7.8" (198 mm)
125 lbs - 8.3" (210 mm)

HANDLE DIAMETER:
1.25" (32 mm) (Non-Knurling)

HANDLE DIAMETER:
1.27" (32.3 mm) (Knurling)

HANDLE LENGTH:
35.4" (900 mm)

WEIGHT:
Single:
15/20/25/30/35/40/45/50/55/60/65/70/75/80/85/90/95/100/105/110/115/120/125 lbs

FF-STRBB



Straight Urethane Barbell Bar Set, 20-110 lbs

MATERIAL:
Solid Steel Heads with
Black Urethane Plating

BARBELL HEAD DIAMETER:
15-20 lbs - 4.9" (124 mm)
25-40 lbs - 6.1" (155 mm)
50-70 lbs - 7" (179 mm)
80-120 lbs - 7.8" (198 mm)

HANDLE DIAMETER:
1.25" (32 mm) (Non-Knurling)

HANDLE DIAMETER:
1.27" (32.3 mm) (Knurling)

HANDLE LENGTH:
35.4" (900 mm)

WEIGHT:
20-110 lbs

FF-STRBB25-115



Straight Urethane Barbell Bar Set, 25-115 lbs

MATERIAL:
Solid Steel Heads with
Black Urethane Plating

BARBELL HEAD DIAMETER:
25-40 lbs - 6.1" (155 mm)
45-70 lbs - 7" (179 mm)
75-120 lbs - 7.8" (198 mm)

HANDLE DIAMETER:
1.25" (32 mm) (Non-Knurling)

HANDLE DIAMETER:
1.27" (32.3 mm) (Knurling)

HANDLE LENGTH:
35.4" (900 mm)

WEIGHT:
25-115 lbs

FF-STRBB-20-60



Straight Urethane Barbell Bar - Set of 5 (20-60 lbs)

MATERIAL:
Solid Steel Heads with
Black Urethane Plating

BARBELL HEAD DIAMETER:
15-20 lbs - 4.9" (124 mm)
25-40 lbs - 6.1" (155 mm)
50-70 lbs - 7" (179 mm)

HANDLE DIAMETER:
1.25" (32 mm) (Non-Knurling)

HANDLE DIAMETER:
1.27" (32.3 mm) (Knurling)

HANDLE LENGTH:
35.4" (900 mm)

WEIGHT:
20-60 lbs

FF-STRBB-25-65



Straight Urethane Barbell Bar - Set of 5 (25-65 lbs)

MATERIAL:
Solid Steel Heads with
Black Urethane Plating

BARBELL HEAD DIAMETER:
25-40 lbs - 6.1" (155 mm)
45-70 lbs - 7" (179 mm)

HANDLE DIAMETER:
1.25" (32 mm) (Non-Knurling)

HANDLE DIAMETER:
1.27" (32.3 mm) (Knurling)

HANDLE LENGTH:
35.4" (900 mm)

WEIGHT:
25-65 lbs

FRENCH FITNESS

02

WEIGHT BARS & COLLARS

FFB-47OC



Black 47" Olympic EZ Curl Bar

LENGTH 47" **WEIGHT** 20 lbs

HANDLE LENGTH / DIAMETER 33.39" / 28 mm

SLEEVE LENGTH / DIAMETER 6.93" / 50 mm

WEIGHT LOADING CAPACITY 300 lbs

COLOR Black

FFC-47OCB



Chrome 47" Olympic Combination Bar

LENGTH 47" **WEIGHT** 20 lbs

HANDLE LENGTH / DIAMETER 32" / 24.85 mm

SLEEVE LENGTH / DIAMETER 7" / 49.91 mm

WEIGHT LOADING CAPACITY 300 lbs

COLOR Chrome

FFC-47OC



Chrome 47" Olympic EZ Curl Bar

LENGTH 47" **WEIGHT** 18.8 lbs

HANDLE LENGTH / DIAMETER 33.39" / 25.1 mm

SLEEVE LENGTH / DIAMETER 6.93" / 50 mm

WEIGHT LOADING CAPACITY 300 lbs

COLOR Chrome

FF-OCB60-700



60" Olympic EZ Curl Bar - 700 lb Capacity

LENGTH 47" **WEIGHT** 30 lbs

HANDLE LENGTH / DIAMETER 35.8" / 28.5 mm

SLEEVE LENGTH / DIAMETER 11" / 50 mm

WEIGHT LOADING CAPACITY 700 lbs

TENSILESTRENGTH 110000 PSI

COLOR Black

FFB-OB60



5' Black Olympic Bar - 26 Lbs

LENGTH 60" **WEIGHT** 26 lbs

HANDLE LENGTH / DIAMETER 38.2" / 28 mm

SLEEVE LENGTH / DIAMETER 10.5" / 50 mm

WEIGHT LOADING CAPACITY 500 lbs

TENSILE STRENGTH 63,800 PSI

COLOR Black

FF-5FOBC



5' Chrome Olympic Bar - 26 Lbs

LENGTH 60" **WEIGHT** 26 lbs

HANDLE LENGTH / DIAMETER 36.54" / 28 mm

SLEEVE LENGTH / DIAMETER 11.26" / 51 mm

WEIGHT LOADING CAPACITY 440 lbs

TENSILE STRENGTH 100,000 PSI

COLOR Chrome

FF-72OB-1000



6' (72") 33 Lb Women's Olympic Power Bar -1000 Lb

LENGTH 72" **WEIGHT** 33 lbs

HANDLE LENGTH / DIAMETER 51.5" / 25 mm

SLEEVE LENGTH / DIAMETER 16" / 50 mm

WEIGHT LOADING CAPACITY 1000 lbs

TENSILE STRENGTH 205000 PSI

COLOR Chrome Sleeves + Black Shaft

FF-72AOB



6' Aluminum Olympic Technology Bar - 17 lbs

LENGTH 72" **WEIGHT** 17 lbs

HANDLE LENGTH / DIAMETER 51" / 28.5 mm

SLEEVE LENGTH / DIAMETER 9.25" / 50 mm

WEIGHT LOADING CAPACITY 100 lbs

COLOR Chrome

FFB-72OB

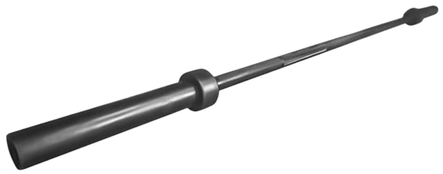

6' Black Olympic Bar - 33 Lbs

LENGTH 72" **WEIGHT** 33 lbs

HANDLE LENGTH / DIAMETER 49.63" / 28 mm

SLEEVE LENGTH / DIAMETER 11" / 50.52 mm

WEIGHT LOADING CAPACITY 600 lbs

COLOR Black

FF-86OB-1500



7' (86") 45 Lb Olympic Power Bar -1500 Lb

LENGTH 86" **WEIGHT** 44 lbs

HANDLE LENGTH / DIAMETER 51.6" / 28 mr

SLEEVE LENGTH / DIAMETER 16" / 50 mm

WEIGHT LOADING CAPACITY 1500 lbs

TENSILESTRENGTH 205000 PSI

COLOR Chrome Sleeves + Black Shaft

FF-86OB



7' (86") Chrome 45 Lb Olympic Bar

LENGTH 86" **WEIGHT** 44 lbs

HANDLE LENGTH / DIAMETER 51.57" / 28 mm

SLEEVE LENGTH / DIAMETER 14.17" / 51 mm

WEIGHT LOADING CAPACITY 700 lbs

TENSILESTRENGTH 150000 PSI

COLOR Chrome

FF-86OB-2000



7' (86") 45 Lb Olympic Elite Power Bar -2000 Lb

LENGTH 86" **WEIGHT** 44 lbs

HANDLE LENGTH / DIAMETER 51.5"/ 29 mm

SLEEVE LENGTH / DIAMETER 17.52" / 50 mm

WEIGHT LOADING CAPACITY 2000 lbs

TENSILESTRENGTH 215000 PSI

COLOR Chrome

FF-72OB



6' Chrome Olympic Bar - 33 Lbs

LENGTH 72" **WEIGHT** 33 lbs

HANDLE LENGTH / DIAMETER 48.8" / 25 mm

SLEEVE LENGTH / DIAMETER 10.4" / 51 mm

WEIGHT LOADING CAPACITY 700 lbs

COLOR Chrome

FFB-86OB



7' Black Olympic Bar - 45 Lbs

LENGTH 86" **WEIGHT** 45 lbs

HANDLE LENGTH / DIAMETER 51.5"/ 30 mm

SLEEVE LENGTH 16.34"

WEIGHT LOADING CAPACITY 2000 lbs

COLOR Black

FF-7OB-FSR90



7' FSR90 / FSR80 Chrome Olympic Bar

LENGTH 86"

WEIGHT 45 lbs

HANDLE LENGTH 56"

SLEEVE LENGTH 13.5"

COLOR Chrome

FF-OCBPB



Olympic Cambered Bench Press / Row Bar

LENGTH 86.31" **WEIGHT** 44.35 lbs
HANDLE LENGTH/DIAMETER 51.31" / 27.75
SLEEVE LENGTH / DIAMETER 16.13" / 50 m
WEIGHT LOADING CAPACITY 600 lbs
COLOR Chrome

FF-OCB



Olympic Camber Bar

LENGTH 79" **WEIGHT** 50.8 lbs
HANDLE LENGTH/DIAMETER 55.5" / 50.17
SLEEVE LENGTH 13.18"
WEIGHT LOADING CAPACITY 881.85 lbs
COLOR Black

FF-SSB



Safety Squat Bar

LENGTH 86" **WEIGHT** 48.5 lbs
HANDLE LENGTH/DIAMETER 15" / 30 mm
SLEEVE LENGTH / DIAMETER 13.12" / 50 m
WEIGHT LOADING CAPACITY 500 lbs
TENSILE STRENGTH 32633 PSI
COLOR Chrome

FF-CDH



2" Olympic Chrome Dumbbell Handles - Set of 2

SIZE 20" (51cm)
MATERIAL Steel

FFR-86COB-1500



Red 7" (86") 45 lb Cerakote Olympic Bar - 1500 lb

LENGTH 86" **WEIGHT** 45 lbs
HANDLE LENGTH/DIAMETER 51.57" / 28 mn
SLEEVE LENGTH / DIAMETER 17.52" / 50 mn
WEIGHT LOADING CAPACITY 1500 lbs
TENSILE STRENGTH 195000 PSI
COLOR Red

FF-SMOSB



Specialty Multi Grip Olympic Swiss Bar

LENGTH 87" **WEIGHT** 40.75 lbs
HANDLE LENGTH/DIAMETER 53" / 30 mm
SLEEVE LENGTH / DIAMETER 17" / 50.28 mn
WEIGHT LOADING CAPACITY 500 lbs
COLOR Chrome Sleeves + Black Shaft

FF-MOSB-V2



Multi Grip Olympic Swiss Bar V2

LENGTH 81.89" **WEIGHT** 44 lbs
SHAFT/HANDLE LENGTH 39"
SHAFT/HANDLE DIAMETER 48 mm
SLEEVE LENGTH 24"
SLEEVE DIAMETER 50 mm **COLOR** Black

FF-FWH

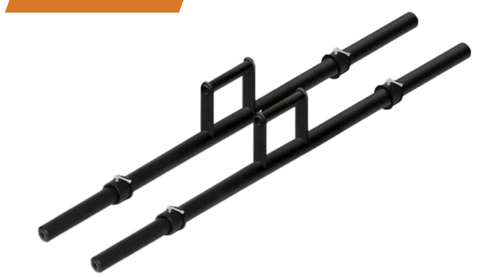

Farmers Walk Handles - Pair

LENGTH 55.12" **WEIGHT** 35.27 lbs
SHAFT/HANDLE DIAMETER 50 mm
SLEEVE LENGTH 11.8"
SLEEVE DIAMETER 60 mm
COLOR Black

FF-34OTB



34" Olympic Tricep Bar

LENGTH 34" **HANDLE LENGTH / DIAMETER** 5.7" / 25 mm
SLEEVE LENGTH / DIAMETER 6.5" / 28 mm **WEIGHT** 26.5 lbs
WEIGHT LOADING CAPACITY 300 lbs **COLOR** Chrome

FFB-TB16



85" XL Trap Bar w/16" Loadable Sleeves – Black

LENGTH 85"
WEIGHT 60 lbs
SLEEVE LENGTH / DIAMETER 16" / 50 mm **COLOR** Black

FFC-56OHB

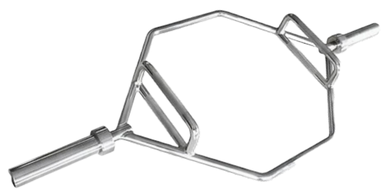

Chrome 56" Olympic Shrug Trap Hex Bar

LENGTH 56" **HANDLE LENGTH / DIAMETER** 13" / 25mm
SLEEVE LENGTH / DIAMETER 11.77" / 28 mm **WEIGHT** 44 lbs
WEIGHT LOADING CAPACITY 500 lbs **COLOR** Chrome

FF-OHTB

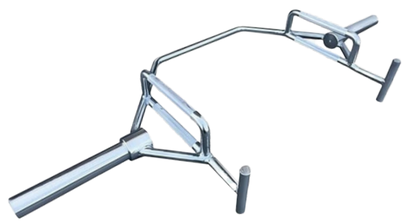

Open Hex Olympic Trap Shrug Bar

LENGTH 55.9" **HANDLE LENGTH / DIAMETER** 11.8"/ 25.4 mm
SLEEVE LENGTH / DIAMETER 9.93" / 50 mm **COLOR** Chrome
WEIGHT LOADING CAPACITY 500 lbs **WEIGHT** 44.25 lbs

Magnetic Aluminum Jaw Lock Collars - (Pair)

MATERIAL Aluminum-TRP-Nylon
BAR SLEEVES 50mm
COLOR Black, Blue, Red, Yellow



FF-MAJLC

Chrome Olympic Spring Collar - Set of 2

BAR SLEEVES 50mm



FFC-OSC

ABS Olympic Jaw Lock Collars / Clamps (Pair)

MATERIAL ABS
BAR SLEEVES 50mm **DEPTH** 1.9"
COLOR Black, Blue, Red



FF-OJLC

Chrome Olympic Spring Collar w/ Plastic Covers - Set of 2

MATERIAL Solid Steel - Chrome plated finish
OLYMPIC BAR SLEEVES 2in (50mm)
COLOR Black



FFC-OSCPC

FRENCH FITNESS

03

STORAGE RACKS



FF-VMBR10

10 Ball Vertical Medicine, Wall & Slam Rack

LENGTH: 15.3" (39 cm)
MATERIAL: Steel
WIDTH: 22.8" (58 cm)
WEIGHT: 39.7 lbs (18 kg)
HEIGHT: 61.4" (156 cm)
STORAGE CAPACITY: 10 Medicine Balls



FF-MBR12

3 Tier Medicine & Slam Ball Rack

LENGTH: 60" (152 cm)
MATERIAL: Steel
WIDTH: 20" (52 cm)
WEIGHT: 28.7 lbs (13 kg)
HEIGHT: 38" (96 cm)
STORAGE CAPACITY: (Depends on the Ball Size)

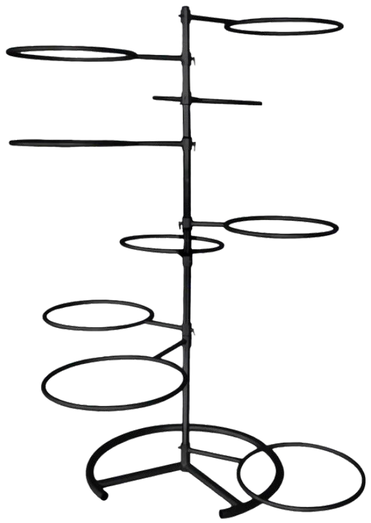

FF-EBR9

9 Ball Exercise / Stability Ball Rack EBR9

LENGTH: 55" (140 cm)
MATERIAL: Steel
WIDTH: 55" (140 cm)
WEIGHT: 30.9 lbs (14 kg)
HEIGHT: 74" (189 cm)
STORAGE CAPACITY: 9 Balls
COLOR: Black



FF-MBR20

Circular 12 Pair Mobile Medicine Ball Rack

HEIGHT: 61" (155 cm)
MATERIAL: Steel
TIER HEIGHT: 17.7" (45 cm)
WEIGHT: 33.8 lbs (15.3 kg)
TIER DIAMETER:
1- 22.2" (56.4 cm)
2- 25"(63.5 cm)
3- 28.9" (73.4 cm)
4- 28.9" (73.4 cm)
STORAGE CAPACITY: 12 Medicine Balls

FF-2TSDB10-V2



2 Tier Saddle Dumbbell Rack V2, 10 Pairs

LENGTH 90.55" (230 cm) **WIDTH** 31.45" (80 cm)
HEIGHT 31.89" (81 cm) **MATERIAL** Steele
WEIGHT 131.4 lbs (59.6 kg) **STORAGE CAPACITY** 10 Pairs

FF-FSVDR

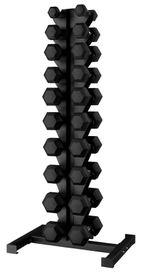

Free Standing Vertical Dumbbell Rack 5-50 lbs, 10 Pairs

LENGTH 9.8" (25 cm) **WIDTH** 5.5" (14 cm)
HEIGHT 61" (155 cm) **MATERIAL** Steele
WEIGHT 50 lbs (23 kg) **STORAGE CAPACITY** 10 Pairs

FF-10PVDR



10 Pair Vertical Dumbbell Rack

LENGTH 19" (49 cm) **WIDTH** 20" (52 cm)
HEIGHT 50" (127 cm) **MATERIAL** Steele
WEIGHT 53 lbs (24 kg)
STORAGE CAPACITY 20 Dumbbells (10 Pairs)

FF-2TSDB10



2 Tier Saddle Dumbbell Rack, 10 Pairs

LENGTH 96.4" (245 cm) **WIDTH** 27.9 (63.5 cm)
HEIGHT 29" (74 cm) **MATERIAL** Steele
WEIGHT 154.3 lbs (70 kg)
STORAGE CAPACITY 20 Dumbbells (10 Pairs)

FF-3THDR



3 Tier Hex Dumbbell Rack

LENGTH 61" (154.9 cm) **WIDTH** 25 (63.5 cm)
HEIGHT 41" (104.1 cm) **MATERIAL** Steele
WEIGHT 72.8 lbs (33 kg)
STORAGE CAPACITY (Depends on the item size)

FF-3TS12PDR



3 Tier Saddle 12 Pair Dumbbell Rack

LENGTH 68" (172 cm) **WIDTH** 25 (63 cm)
HEIGHT 36" (92 cm) **MATERIAL** Steele
WEIGHT 140.7 lbs (63.8 kg)
STORAGE CAPACITY 24 Dumbbells (12 Pairs)

FF-3TS15PDR



3 Tier Saddle 15 Pair Dumbbell Rack

LENGTH 82.5" (210 cm) **WIDTH** 29.1" (74 cm)
HEIGHT 36.2" (92 cm) **MATERIAL** Steele
WEIGHT 143 lbs (64.8 kg)
STORAGE CAPACITY 30 Dumbbells (15 Pairs)

FF-3TSDB10



3 Tier Saddle Dumbbell Rack, 10 Pairs

LENGTH 58.5" (148.6 cm) **WIDTH** 33.25 (84.6 cm)
HEIGHT 39.75" (101 cm) **MATERIAL** Steele
WEIGHT 75 lbs (34 kg)
STORAGE CAPACITY 20 Dumbbells (10 Pairs)

FF-TDR



Triangle Vertical 10 Pair Dumbbell Rack

LENGTH 25.2" (64 cm) **WIDTH** 22.4 (57 cm)
HEIGHT 51.2" (130 cm) **MATERIAL** Steele
WEIGHT 44 lbs (20 kg)
STORAGE CAPACITY 20 Dumbbells (10 Pairs)

FF-4SVDR-16



4-Sided Vertical Dumbbell Rack, 16 Pairs

LENGTH 22" (56 cm) **WIDTH** 15.8 (40 cm)
HEIGHT 47.2" (120 cm) **MATERIAL** Steele
WEIGHT 63.05 lbs (28.6 kg)
STORAGE CAPACITY 32 Dumbbells (16 Pairs)

FF-HDR



3 Tier Hex Dumbbell Rack

LENGTH 59" (149.8 cm) **WIDTH** 30 (76.2 cm)
HEIGHT 38" (96.5 cm) **MATERIAL** Steele
WEIGHT 90.4 lbs (41 kg)
STORAGE CAPACITY (Depends on the item size)

FF-ADSS



Adjustable Dumbbell Set Stand

MATERIAL Steele
STORAGE CAPACITY 2 Adjustable Dumbbells

FF-CMPTBBR



Compact Barbell Rack

LENGTH 32" (81.5 cm) **WIDTH** 31" (78 cm)
HEIGHT 56" (142.5 cm) **MATERIAL** Steele
WEIGHT 121 lbs (55 kg) **STORAGE CAPACITY** 10 Barbells

FF-PROBBR



Professional Barbell Rack

LENGTH 36" (92 cm) **WIDTH** 34" (87 cm)
HEIGHT 66" (168 cm) **MATERIAL** Steele
WEIGHT 148 lbs (67 kg) **STORAGE CAPACITY** 10 Barbells

FF-3TKR



3 Tier Kettlebell Rack

LENGTH 54" (137 cm) **WIDTH** 24" (61 cm)
HEIGHT 36" (91 cm) **MATERIAL** Steele
WEIGHT 126 lbs (57 kg)
STORAGE CAPACITY Depends on the item size

FF-VO10BRH



Vertical Olympic 10 Bar Rack Holder

MATERIAL Steele
WEIGHT 37 lbs (16.8 kg)
STORAGE CAPACITY 10 Bars

FF-VO9BRH



Vertical Olympic 9 Bar Rack Holder

LENGTH 20" (50.8 cm) **WIDTH** 20" (50.8 cm)
HEIGHT 6" (15.2 cm) **MATERIAL** Steele
WEIGHT 32.4 lbs (14.7 kg) **STORAGE CAPACITY** 9 Bars

FF-WBB-RACK



Weighted Body Fitness Bar Rack

LENGTH 16" (40.6 cm) **WIDTH** 14" (35.6 cm)
HEIGHT 46.6" (118.4 cm) **MATERIAL** Steele
STORAGE CAPACITY 24 Body Bars

FF-8BWMHR



8 Bar Wall Mounted Horizontal Rack

LENGTH 55" (139.7 cm) **WIDTH** 6" (15.2 cm)
HEIGHT 3.5" (8.9 cm) **MATERIAL** Steele
WEIGHT 26.4 lbs (12 kg)
STORAGE CAPACITY 8 Bars

FF-BBH



Belt & Band Hanger Wall Mounted Rack

LENGTH 23.4" (59.7 cm) **WIDTH** 3.9" (10 cm)
HEIGHT 5" (12.7 cm) **MATERIAL** Steele
WEIGHT 4.4 lb (2 kg)
STORAGE CAPACITY 10 Holder Prongs

FF-MHWMR



Mat Hanger Wall Mounted Rack

LENGTH 21.6" (54.9 cm) **WIDTH** 6" (15.2 cm)
HEIGHT 4" (10 cm) **MATERIAL** Steele
WEIGHT 3.15 lbs (1.4 kg)
STORAGE CAPACITY 10 Holder Prongs

FF-MHWMR2



Mat Hanger Wall Mounted Rack Version 2

LENGTH 23.7" (60.2 cm) **WIDTH** 2" (5.1 cm)
HEIGHT 7.5" (19 cm) **MATERIAL** Steele
WEIGHT 7.7 lbs (3.5 kg)
STORAGE CAPACITY 10 Mats

FF-MBR4-WM



MBR4 Wall Mounted Medicine Ball Rack

LENGTH 61" (155 cm) **WIDTH** 17.7" (45 cm)
HEIGHT 9.8" (25 cm) **MATERIAL** Steele
WEIGHT 11 lbs (5 kg)
STORAGE CAPACITY (Depends on the item size)

FF-JRR-WM



Wall Mounted Jump Rope Rack Hanger

LENGTH 27" (69 cm) **WIDTH** 11.4" (29 cm)
HEIGHT 2.7" (7 cm) **MATERIAL** Steele
WEIGHT 5.5 lbs (2.5 kg)
STORAGE CAPACITY 5 Holder Prongs

FF-BP-20SR



Aerobic Bar & Plate Rack - Fits 20 Sets

LENGTH 63.4" (161 cm) **WIDTH** 21.3" (54 cm)
HEIGHT 51.2" (130 cm) **MATERIAL** Steele
WEIGHT 99.2 lbs (45 kg) **STORAGE CAPACITY** 20 Sets

FF-HBPSR



Horizontal Bumper Plate Storage Rack

LENGTH 12.5" (32 cm) **WIDTH** 41.3" (105 cm)
HEIGHT 11.4" (29 cm) **MATERIAL** Steele
WEIGHT 37.4 (17 kg)
STORAGE CAPACITY 6-12 Bumper Plates

FF-OWT20



Olympic Weight Plate Tree

LENGTH 26.9" (68.5 cm) **WIDTH** 21.2" (54 cm)
HEIGHT 37.4" (95 cm) **MATERIAL** Steele
WEIGHT 45.2 lbs (20.5 kg)
STORAGE CAPACITY (Depends on the item size)

FF-OWT30



Olympic Weight Tree Storage Rack

LENGTH 32" (81 cm) **WIDTH** 32" (81 cm)
HEIGHT 53" (132.5 cm) **MATERIAL** Steele
WEIGHT 86 lbs (30 kg)
STORAGE CAPACITY (Depends on the item size)

FF-OWTBH5



Olympic Weight Tree Rack & Bar Holder

LENGTH 24.5" (62.2 cm) **WIDTH** 21.5" (54.6 cm)
HEIGHT 70" (177.8 cm) **MATERIAL** Steele
WEIGHT 32.4 lbs (14.7 kg)
STORAGE CAPACITY (Depends on the item size)

FF-PBPSR



Portable Bumper Plate Stacker Rack w/Wheels

LENGTH 20.8" (53 cm) **WIDTH** 20.8" (53 cm)
HEIGHT 37.9" (96.5 cm) **MATERIAL** Steele
WEIGHT 18.3 lbs (8.3 kg)
STORAGE CAPACITY (Depends on the item size)



FF-SR7

7 ft Combination Universal Storage Rack

LENGTH: 86" (218.4 cm)

MATERIAL: Steel

WIDTH: 18.25" (46.4 cm)

WEIGHT: 39.7 lbs (18 kg)

HEIGHT: 67.5" (171.5 cm)

STORAGE CAPACITY: (Depends on item size)



FFS-USRS

Silver Universal Storage Rack System

LENGTH: 150.72" (382.8 cm)

MATERIAL: Steel

WIDTH: 9.75" (24.8 cm)

STORAGE CAPACITY: (Depends on item size)

HEIGHT: 85.75" (217.8 cm)



FF-MSS-48

Monster Universal Storage System

LENGTH 48.5" (123.2 cm)

WIDTH 23.8" (60.4 cm)

HEIGHT 45.3" (115 cm) **MATERIAL** Steel

STORAGE CAPACITY (Depends on the item size)



FF-MSS-77

Monster Universal Storage System

LENGTH 76.5" (194.3 cm)

WIDTH 23.8" (60.4 cm)

HEIGHT 45.3" (115 cm) **MATERIAL** Steel

STORAGE CAPACITY (Depends on the item size)



FF-MSS-94

Monster Universal Storage System

LENGTH 94" (238,7 cm)

WIDTH 23.75" (60,3 cm)

HEIGHT 45.25" (114,9 cm) **MATERIAL** Steel

STORAGE CAPACITY (Depends on the item size)



FF-SBR-10

10 Set Sandbag Power Bag Rack

LENGTH: 27.1" (69 cm)
MATERIAL: Steel
WIDTH: 23.6" (60 cm)
WEIGHT: 69 lbs (31.3 kg)
HEIGHT: 66.9" (170 cm)
STORAGE CAPACITY: 10 Sandbags



FF-ASR-PACK

Accessory Package w/Rack

LENGTH: 18.5" (47 cm)
MATERIAL: Steel
WIDTH: 16.5" (42 cm)
WEIGHT: 44 lbs (20 kg) - Rack
HEIGHT: 50" (127 cm)
STORAGE CAPACITY: 36 Cable Attachments



FF-ASR

Accessory Stand Rack

LENGTH 18.5" (47 cm) **WIDTH** 16.5" (42 cm)
HEIGHT 50" (127 cm) **MATERIAL** Steel
WEIGHT: 44 lbs (20 kg)
STORAGE CAPACITY 36 Cable Attachments

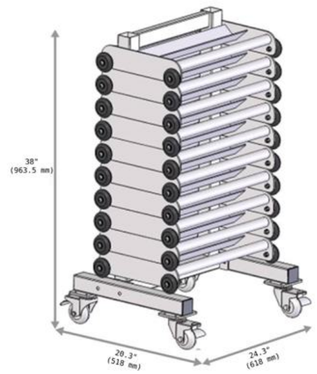

FF-GHRSR

Glute Ham Roller Storage Rack

LENGTH 24.3" (61.8 cm) **WIDTH** 20.3" (51.8 cm)
HEIGHT 38" (96.3 cm) **MATERIAL** Steel
WEIGHT: 11 lbs (5 kg)
STORAGE CAPACITY 10 Glute Ham Rollers



FFN-AHBSR5

Napa Accessory, Handle, & 5 Bar Storage Rack

LENGTH 43" (110 cm) **WIDTH** 29" (74 cm)
HEIGHT 42" (107 cm) **COLOR** Silver
WEIGHT: 150 lbs (68 kg) total weight



FFM-AHBSR3

Marin Accessory, Handle, & 3 Bar Storage Rack

LENGTH: 43" (110 cm)

MATERIAL: Steel

WIDTH: 29" (74 cm)

WEIGHT: 180 lbs (82 kg)

HEIGHT: 42" (107 cm)

STORAGE CAPACITY: (Depends on the item size)



FFN-AHBSR3

Napa Accessory, Handle, & 3 Bar Storage Rack

LENGTH: 43" (110 cm)

MATERIAL: Steel

WIDTH: 29" (74 cm)

WEIGHT: 150 lbs (68 kg)

HEIGHT: 42" (107 cm)

STORAGE CAPACITY: (Depends on the item size)



FFM-AHBSR5

Marin Accessory, Handle, & 5 Bar Storage Rack

LENGTH: 43" (110 cm)

MATERIAL: Steel

WIDTH: 29" (74 cm)

WEIGHT: 150 lbs (68 kg)

HEIGHT: 42" (107 cm)

STORAGE CAPACITY: (Depends on the item size)



FF-MSAT

Multi-Storage Accessory Tower Rack

LENGTH: 83.5" (212 cm)

MATERIAL: Steel

WIDTH: 31.9" (81 cm)

WEIGHT: 187.4 lbs (85 kg)

HEIGHT: 86.6" (220 cm)

STORAGE CAPACITY: (Depends on the item size)

FRENCH FITNESS

04
BENCHES

FF-DFIB-FSR



Decline Flat Incline Bench

LENGTH: 54" (135 cm)
WIDTH: 22" (54 cm)
HEIGHT: 19" (47 cm)
WEIGHT: 71 lbs (32 kgs)
COLOR: Blue Seat/Black Frame
MATERIAL: Leather, PVC seat cushion, Steel

FF-FIB



0-90 Degree Adjustable Bench

LENGTH: 52.16" (132.5 cm)
WIDTH: 30.11" (76.5 cm)
HEIGHT: 18.3" (46.5 cm)
WEIGHT: 79.37 lbs (36 kg)
STEEL TUBE THICKNESS: 2 mm
COLOR: Black
MATERIAL: Leather, Foam, Steel

FFA-CFDI



Aspen Commercial Flat / Decline / Incline Bench

MATERIAL Leather, PVC seat cushion, Steel
LENGTH 59.8" (152 cm) **WIDTH** 31.8" (81 cm)
HEIGHT 19.2" (49 cm) **WEIGHT** 127.8 lbs (58 kg)
STEEL TUBE THICKNESS 2.5 mm **COLOR** Black

FFB-MAB



Black MAB Multi Adjustable Bench

MATERIAL Leather, Foam, Steel **LENGTH** 55" (138 cm)
WIDTH 32" (81 cm) **HEIGHT** 44" (112 cm)
WEIGHT 99 lb (45 kg) **STEEL TUBE THICKNESS** 3 mm
COLOR Black

FFB-DFIB



-15 to 90 Degree Adjustable / Decline Bench

MATERIAL Leather, Foam, Steel
LENGTH 60.4" (153.5 cm) **WIDTH** 22.6" (57.5 cm)
HEIGHT 51.2" (130 cm) **WEIGHT** 70.5 lbs (32 kg)
STEEL TUBE THICKNESS 3 mm **COLOR** Black

FFS-MAB



Silver MAB Multi Adjustable Bench

MATERIAL Leather, Foam, Steel **LENGTH** 55" (138 cm)
WIDTH 32" (81 cm) **HEIGHT** 44" (112 cm)
WEIGHT 99 lb (45 kg) **STEEL TUBE THICKNESS** 3 mm
COLOR Silver/Black

FF-FSR100-ABD



Adjustable Bench w/Decline

MATERIAL Leather, Foam, Steel **LENGTH** 52.3" (133 cm)
WIDTH 24.6" (62.5 cm)
HEIGHT 18.8" to 52.1" (48 - 132.5 cm)
WEIGHT 93.6 lbs (42.5 kg)
STEEL TUBE THICKNESS 2.5 mm **COLOR** Black

FF-FSR50-AB



Adjustable Bench

MATERIAL Leather, Foam, Steel **LENGTH** 47.6" (121 cm)
WIDTH 28.6" (72.7 cm) **HEIGHT** 18" (45.8 cm)
WEIGHT 92.5 (42 kg) **STEEL TUBE THICKNESS** 3 mm
COLOR Black

FF-MAB30



Multi Adjustable Bench

MATERIAL Leather, Foam, Steel
LENGTH 53.3" (135.5 cm) **WIDTH** 31" (78.5 cm)
HEIGHT 53" (134 cm) **WEIGHT** 99.2 lbs (45 kg)
STEEL TUBE THICKNESS 3 mm **COLOR** Black

FF-MFAB-ACLE-V2



Multi Functional Adjustable Bench V2 w/Arm Curl + Leg Ext

MATERIAL Leather, Foam, Steel **LENGTH** 73" (185 cm)
WIDTH 28" (69 cm) **HEIGHT** 32" (80-130 cm)
WEIGHT 110 lbs (50 kg)
COLOR Black

FFP-CFDI



Phoenix Commercial Flat / Decline / Incline Bench

MATERIAL Leather, Foam, Steel **LENGTH** 59.8" (152 cm)
WIDTH 31.8" (81 cm) **HEIGHT** 19.2" (49 cm)
WEIGHT 127.8 lbs (58 KG)
STEEL TUBE THICKNESS 2.5 mm **COLOR** Silver/Black

FFB-AADB



Black Abdominal / Adj Decline Bench

MATERIAL Leather, Foam, Steel **LENGTH** 61" (155 cm)
WIDTH 44" (112 cm) **HEIGHT** 32" (81 cm)
WEIGHT 84 lb (38 kg)
STEEL TUBE THICKNESS 3 mm **COLOR** Black

FFS-AADB



Silver Abdominal / Adj Decline Bench

MATERIAL Leather, Foam, Steel **LENGTH** 61" (155 cm)
WIDTH 44" (112 cm) **HEIGHT** 32" (81 cm)
WEIGHT 84 lb (38 kg)
STEEL TUBE THICKNESS 3 mm **COLOR** Silver/Black

FF-MAB20-AR



Multi Adjustable Bench w/ Ab Rollers

MATERIAL Leather, Foam, Steel **LENGTH** 51.9" (132 cm)
WIDTH 18.1" (46 cm) **HEIGHT** 20.2" (51.5 cm)
WEIGHT 143.3 lbs (65kg)
STEEL TUBE THICKNESS 3 mm **COLOR** Black

FFB-ACB



Black Ab Crunch Bench

LENGTH:
62" (157.5 cm)

COLOR:
Black

WIDTH:
32.8" (83.2 cm)

STEEL TUBE THICKNESS:
3 mm

HEIGHT:
40.3" (102.2 cm)

MATERIAL:
Leather, Foam, Steel

FFS-ACB



Silver Ab Crunch Bench

LENGTH:
62" (157.5 cm)

COLOR:
Silver/Black

WIDTH:
32.75" (83.2 cm)

STEEL TUBE THICKNESS:
3 mm

HEIGHT:
40.25" (102.2 cm)

MATERIAL:
Leather, Foam, Steel

FF-FB10



Heavy Duty Flat Weight Bench

MATERIAL Leather, Foam, Steel **LENGTH** 50" (127 cm)
WIDTH 23" (59 cm) **HEIGHT** 17" (43 cm)
WEIGHT 42 lbs (19 kgs) **STEEL TUBE THICKNESS** 2 mm
COLOR Black

FF-FB20



Commercial Flat Weight Bench

MATERIAL Leather, Foam, Steel **LENGTH** 57" (145 cm)
WIDTH 23" (58 cm) **HEIGHT** 17" (42 cm)
WEIGHT 42 lbs (19 kgs) **STEEL TUBE THICKNESS** 2 mm
COLOR Black

FF-FB40



Commercial Flat Weight Bench

MATERIAL Leather, Foam, Steel **LENGTH** 43.3" (110 cm)
WIDTH 21.4" (54.5 cm) **HEIGHT** 17.5" (44.5 cm)
WEIGHT 550 lbs (250 kg) **STEEL TUBE THICKNESS** 2 mm
COLOR Black

FFB-UB



Black Utility Bench

LENGTH: 39" (99.1 cm)
WIDTH: 25" (63.5 cm)
HEIGHT: 35.25" (89.5 cm)
WEIGHT: 40 lbs (18 kg)
STEEL TUBE THICKNESS: 3 mm
COLOR: Black
MATERIAL: Leather, Foam, Steel

FFS-UB



Silver Utility Bench

LENGTH: 39" (99.1 cm)
WIDTH: 25" (63.5 cm)
HEIGHT: 35.25" (89.5 cm)
WEIGHT: 40 lbs (18 kg)
STEEL TUBE THICKNESS: 3 mm
COLOR: Silver/Black
MATERIAL: Leather, Foam, Steel

FF-MAOSB



Multi Adjustable Olympic Smith Bench

MATERIAL Leather, Foam, Steel **LENGTH** 70" (177.8 cm)
WIDTH 73" (185.4 cm) **HEIGHT** 70" (177.8 cm)
WEIGHT 121lbs (55kg) **STEEL TUBE THICKNESS** 1.5 mm
COLOR Silver

FFB-OFB



Black Olympic Flat Bench Press

MATERIAL Leather, Foam, Steel **LENGTH** 54" (137.2 cm)
WIDTH 48" (121.9 cm) **HEIGHT** 44" H (111.8 cm)
WEIGHT 130 lbs (59 kg) **STEEL TUBE THICKNESS** 3 mm
COLOR Black

FFB-OFBWH



Black Olympic Flat Bench w/ Weight Horns

MATERIAL Leather, Foam, Steel **LENGTH** 72" (182.9 cm)
WIDTH 68" (172.7 cm) **HEIGHT** 44" (111.8 cm)
WEIGHT 130 lbs (59 kg) **STEEL TUBE THICKNESS** 3 mm
COLOR Black

FFB-ODB-BLACK



Black Olympic Decline Bench

MATERIAL Leather, Foam, Steel **LENGTH** 68" (173 cm)
WIDTH 51" (130 cm) **HEIGHT** 51" (130 cm)
WEIGHT 210 lbs (96 kg) **STEEL TUBE THICKNESS** 3 mm
COLOR Black

FFB-OIB



Black Olympic Incline Bench

MATERIAL Leather, Foam, Steel **LENGTH** 52" (132 cm)
WIDTH 58" (147.3 cm) **HEIGHT** 57" (144.8 cm)
WEIGHT 94 lbs (43 kg) **STEEL TUBE THICKNESS** 3 mm
COLOR Black

FFB-OMB



Black Olympic Military Bench

MATERIAL Leather, Foam, Steel **LENGTH** 51" (129.5 cm)
WIDTH 48" (121.9 cm) **HEIGHT** 67" (170.2 cm)
WEIGHT 171 lbs (78kg) **STEEL TUBE THICKNESS** 3 mm
COLOR Black

FFS-OMB



Silver Olympic Military Bench

MATERIAL Leather, Foam, Steel **LENGTH** 51" (129.5 cm)
WIDTH 48" (121.9 cm) **HEIGHT** 67" (170.2 cm)
WEIGHT 171 lbs (78kg) **STEEL TUBE THICKNESS** 3 mm
COLOR Silver/Black

FFM-OIBWH



Marin Olympic Incline Bench w/Weight Storage

MATERIAL Leather, Foam, Steel
LENGTH 63.3" (160.8 cm) **WIDTH** 73.6" (187 cm)
HEIGHT 60.4" (153.4 cm) **WEIGHT** 202.8 lbs (92 kg)
STEEL TUBE THICKNESS 3 mm **COLOR** Black

FFN-OIBWH



Napa Olympic Incline Bench w/Weight Storage

MATERIAL Leather, Foam, Steel
LENGTH 63.3" (160.8 cm) **WIDTH** 73.6" (187 cm)
HEIGHT 60.4" (153.4 cm) **WEIGHT** 202.8 lbs (92 kg)
STEEL TUBE THICKNESS 3 mm **COLOR** Silver/Black

FFN-FIDOBP



Newport 3 Way Flat Incline Decline Olympic Bench

MATERIAL Leather, Foam, Steel
LENGTH 95" (241.3 cm) **WIDTH** 74" (188 cm)
HEIGHT 56" (142.2 cm)
WEIGHT 196.2 lbs (89 kg)
STEEL TUBE THICKNESS 2.5 mm **COLOR** Black

FFV-FIDOBP



Venice 3 Way Flat Incline Decline Olympic Bench

MATERIAL Leather, Foam, Steel
LENGTH 95" (241.3 cm) **WIDTH** 74" (188 cm)
HEIGHT 56" (142.2 cm)
WEIGHT 196.2 lbs (89 kg)
STEEL TUBE THICKNESS 2.5 mm
COLOR Silver/Black



FFS-ODB-SILVER

Silver Olympic Decline Bench

MATERIAL Leather, Foam, Steel
LENGTH 68" (172.7 cm) **WIDTH** 51" (129.5 cm)
HEIGHT 51" (129.5 cm) **WEIGHT** 210 lbs (96 kg)
STEEL TUBE THICKNESS 3 mm **COLOR** Silver/Black



FFS-OFB

Silver Olympic Flat Bench Press

MATERIAL Leather, Foam, Steel
LENGTH 54" (137.2 cm) **WIDTH** 48" (122 cm)
HEIGHT 44" (111.8 cm) **WEIGHT** 130 lbs (59 kg)
STEEL TUBE THICKNESS 3 mm **COLOR** Silver/Black



FFS-OFBWH

Silver Olympic Flat Bench w/ Weight Horns

MATERIAL Leather, Foam, Steel
LENGTH 72" (182.9 cm) **WIDTH** 68" (172.7 cm)
HEIGHT 44" (111.8 cm) **WEIGHT** 130 lbs (59 kg)
STEEL TUBE THICKNESS 3 mm **COLOR** Silver/Black



FFS-OIB

Silver Olympic Incline Bench

MATERIAL Leather, Foam, Steel
LENGTH 52" (132 cm) **WIDTH** 58" (147.3 cm)
HEIGHT 57" (144.8 cm) **WEIGHT** 94 lbs (43 kg)
STEEL TUBE THICKNESS 3 mm **COLOR** Silver/Black



FFM-ACB

Marin Arm / Bicep Curl Bench

MATERIAL Leather, Foam, Steel
LENGTH 39.3" (100 cm) **WIDTH** 31.4" (80 cm)
HEIGHT 44" (112 cm) **WEIGHT** 231.4 lbs (105 kg)
STEEL TUBE THICKNESS 3 mm **COLOR** Black



FFN-ACB

Napa Arm / Bicep Curl Bench

MATERIAL Leather, Foam, Steel
LENGTH 39.3" (100 cm) **WIDTH** 31.4" (80 cm)
HEIGHT 44" (112 cm) **WEIGHT** 231.4 lbs (105 kg)
STEEL TUBE THICKNESS 3 mm **COLOR** Silver/Black



FFM-SRB

Marin Seal Row Bench

MATERIAL Leather, Foam, Steel
LENGTH 63.8" (162.1 cm) **WIDTH** 51.1" (129.9 cm)
HEIGHT 40.8" (103.7 cm) **WEIGHT** 220 lbs (100 kg)
STEEL TUBE THICKNESS 3 mm **COLOR** Black



FFN-SRB

Napa Seal Row Bench

MATERIAL Leather, Foam, Steel
LENGTH 63.8" (162.1 cm) **WIDTH** 51.1" (129.9 cm)
HEIGHT 40.8" (103.7 cm) **WEIGHT** 220 lbs (100 kg)
STEEL TUBE THICKNESS 3 mm **COLOR** Silver/Black



FF-HTB20

Hip Thrust Bench Platform

MATERIAL Leather, Foam, Steel
LENGTH 62" (157.5 cm) **WIDTH** 35" (90 cm)
HEIGHT 18" (46 cm) **WEIGHT** 77 lbs (34.9 kg)
STEEL TUBE THICKNESS 2 mm **COLOR** Black



FF-SS20

Sissy Squat

MATERIAL Leather, Foam, Steel
LENGTH 47.8" (121.6 cm) **WIDTH** 19.6" (50 cm)
HEIGHT 21.8" (555 cm) **WEIGHT** 49.6 lbs (22.5kg)
COLOR Black

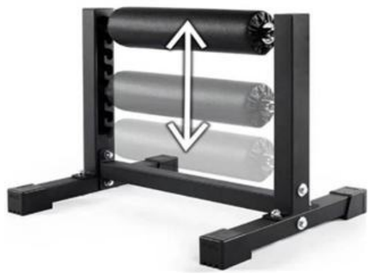

FF-SLRASS

Single Leg Roller Adjustable Squat Stand - Bulgarian Split Squats

MATERIAL Leather, Foam, Steel
LENGTH 24.5" (62.3 cm) **WIDTH** 22" (56 cm)
HEIGHT 23.6" (60 cm) **WEIGHT** 26.5 lbs (12 kg)
STEEL TUBE THICKNESS 2 mm **COLOR** Black



FF-PLPSDSC

Power Smith Dual System Converging Bench Press Combo Plate Loaded

MATERIAL Leather, Foam, Steel
LENGTH 62.7" (159.2 cm) **WIDTH** 52" (132.1 cm)
HEIGHT 80.75" (205.1 cm)
WEIGHT 439 lbs (199.5 kg)
STEEL TUBE THICKNESS 2 mm **COLOR** Black

FF-ADMAB



Aerobic Deck Multifunctional Adjustable Bench

MATERIAL PVC

LENGTH 43.3" (110 cm) **WIDTH** 13.1" (33.5 cm)

HEIGHT 7.9-13.8" (20-35 cm)

COLOR Black/Gray

WEIGHT CAPACITY: 330 lbs (150 kg)

PRODUCT WEIGHT: 26.5 lbs (12 kg)

FF-RH80



Reverse Hyperextension Donkey Kick

MATERIAL 12 Gauge Steel

LENGTH 73" (85.4 cm)

WIDTH 53.1" (134.8 cm)

HEIGHT 54.7" (138.9 cm)

WEIGHT 142 lbs (64.5 kg)

WEIGHT CAPACITY 661lbs (300kg)

VINYL COLOR Black **COLOR** Black

FF-RR-GHDR

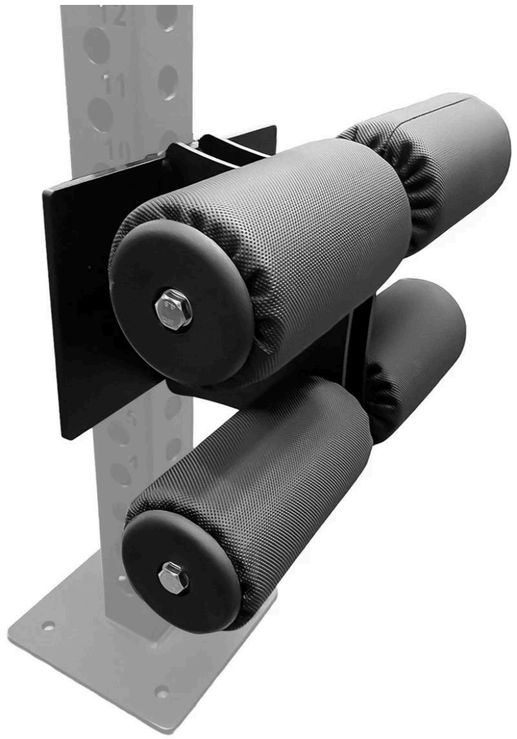

Rack & Rig Glute Ham Developer GHD Rollers

LENGTH:
13.5" (34.2 cm)

PAINT COLOR:
Black

WIDTH:
18" (45.7 cm)

PRODUCT WEIGHT:
33.1 lbs (15 kg)

HEIGHT:
11.5" (29.2 cm)

FF-LSSM20



Leg Split Stretcher Machine

LENGTH:
49" (125 cm)

MAIN TUBE SIZE:
25 x 50 x 1.5 mm

WIDTH:
74" (187 cm)

WEIGHT:
38.14 lbs (17.3 kg)

HEIGHT:
21" (54 cm)

FF-SC15-Black



Stretch Cage - Black

LENGTH:
58.5" (front to back)

WIDTH:
51" (bolt to bolt)

HEIGHT:
89"

WEIGHT:
320 lbs (145 kg)

MATERIAL:
11 Gauge Steel
High quality steel tube ASTM A36
Tungsten Inert Gas (TIG) welding
Quality PU leather

COLOR:
Black

FF-SC15



Stretch Cage - Silver

LENGTH:
58.5" (front to back)

WIDTH:
51" (bolt to bolt)

HEIGHT:
89"

WEIGHT:
320 lbs (145 kg)

MATERIAL:
11 Gauge Steel
High quality steel tube ASTM A36
Tungsten Inert Gas (TIG) welding
Quality PU leather

COLOR:
Black

FF-ST10



Stretch Trainer

LENGTH:
60.5" (153.67 cm)

WIDTH:
37.25" (94.62 cm)

HEIGHT:
44.4" (112.78 cm)

MATERIAL:
High quality steel tube ASTM A36
Tungsten Inert Gas (TIG) welding
Quality PU leather

WEIGHT:
77 lbs (35 kg)

FFS-PVKR



Pull Up / Vertical Knee Raise VKR

MATERIAL 11 Gauge Steel, 50 x 100 x 3 mm Oval steel

LENGTH 58" (148 cm) **WIDTH** 44" (111 cm)

HEIGHT 93" (235 cm) **WEIGHT** 199 lbs (90 kg)

MAX USER WEIGHT 661 lbs (300 kg)

PAINT COLOR Silver **VINYL COLOR** Black

FFB-PVKR



Pull Up / Vertical Knee Raise VKR

MATERIAL 11 Gauge Steel, 50 x 100 x 3 mm Oval steel tube

LENGTH 58" (148 cm) **WIDTH** 44"W (111 cm)

HEIGHT 93" (235 cm) **WEIGHT** 199 lbs (90 kg)

MAX USER WEIGHT 661 lbs (300 kg)

PAINT COLOR Black **VINYL COLOR** Black

FF-VKR20-PT



Vertical Knee Raise / Pull Up Powertower VKR

LENGTH 54.1" (137.5 cm)

WIDTH 47.6" (121 cm)

HEIGHT 86.6" (220 cm)

WEIGHT 85 lbs (38.2 kg)

MAX USER WEIGHT 308 lbs (140 kg)

FFB-HBCC-VKR



Black Half Ball Captain's Chair Leg Raise VKR

MATERIAL 11 Gauge Steel, 65 x 114 x 3mm Flat oval steel tube

LENGTH 44" (110 cm) **WIDTH** 32" (81 cm)

HEIGHT 62" (157 cm) **WEIGHT** 102 lbs (46 kg)

PAINT COLOR Black **VINYL COLOR** Black

HALF BALL COLOR Blue (with options to change to Black or Silver)

FFS-HBCC-VKR



Silver Half Ball Captain's Chair Leg Raise VKR

MATERIAL 11 Gauge Steel, 65 x 114 x 3mm Flat oval steel tube

LENGTH 44" (110 cm) **WIDTH** 32" (81 cm)

HEIGHT 62" (157 cm) **WEIGHT** 102 lbs (46 kg)

PAINT COLOR Silver **VINYL COLOR** Black

HALF BALL COLOR Blue (with options to change to Black or Silver)



FF-P-PWS

Push / Pull Weight Sled

LENGTH: 43" (109 cm)
MATERIAL: Steel
WIDTH: 24" (61 cm)
PRODUCT WEIGHT: 68.2 lbs
HEIGHT: 41" (105 cm)
TUBE SIZE: 70 mm × 50 mm × 2 mm
COLOR: Black



FF-P-PWS-V2

Push / Pull Weight Sled V2

LENGTH: 45.2" (115 cm)
MATERIAL: Steel
WIDTH: 23.6" (60 cm)
PRODUCT WEIGHT: 99.2 lbs
HEIGHT: 41.5" (105.5 cm)
TUBE SIZE: 70 mm × 50 mm × 2 mm
COLOR: Black



FF-WBWS

Wheelbarrow Weight Sled

LENGTH: 45.2" (115 cm)
MATERIAL: Steel
WIDTH: 23.622" (60 cm)
PRODUCT WEIGHT: 99 lbs
HEIGHT: 41.5" (105.5 cm)
TUBE SIZE: 70 mm × 50 mm × 2 mm
COLOR: Black



FF-XT8

Power Sled w/ Resistance

LENGTH: 47.2" (120 cm)
MATERIAL: Steel
WIDTH: 37" (94 cm)
PRODUCT WEIGHT: 176.3 lbs
HEIGHT: 38.3" (97.5 cm)
WEIGHT CAPACITY: 660 lbs
COLOR: Black
TUBE SIZE: 50 × 50 × 3mm Q235-gauge Steel

FFB-45DHBE



Black 45 Degree Hyperextension Back Extension

MATERIAL 11 Gauge Steel **LENGTH** 50" (127 cm)
WIDTH 37" (93.9 cm) **HEIGHT** 38" (96.5 cm)
VINYL COLOR Black **COLOR** Black
WEIGHT 160 lbs (72.7 kg)

FF-GHD30



GHD Compact Roman Chair

MATERIAL Steel **LENGTH** 87" (221 cm)
WIDTH 31" (79 cm) **HEIGHT** 45" (113 cm)
WEIGHT 142lbs (64.2kg) **WEIGHT CAPACITY** 350 lbs
VINYL COLOR Black **COLOR** Black

FFS-45DHBE



Silver 45 Degree Hyperextension Back Extension

MATERIAL 11 Gauge Steel **LENGTH** 50" (127 cm)
WIDTH 37" (93.9 cm) **HEIGHT** 38" (96.5 cm)
VINYL COLOR Black **COLOR** Silver
WEIGHT 160 lbs (72.7 kg)

FF-HE450



45 Degree Back Hyperextension

MATERIAL Steel **LENGTH** 51" (129.5 cm)
WIDTH 26" (66 cm) **HEIGHT** 34" (86.3 cm)
PAD DISTANCE ADJUSTMENTS 10
WEIGHT 44lbs (20kg) **VINYL COLOR** Black
COLOR Black

FF-FGHD



Floor Glute & Hamstring Developer

MATERIAL 11 Gauge Steel **LENGTH** 68" (172.7 cm)
WIDTH 59.6" (151.3 cm) **HEIGHT** 5.7" (14.4 cm)
VINYL COLOR Black **COLOR** Black
WEIGHT 103.6 lbs (47 KG)
STEEL TUBE SIZE 75 mm × 75 mm × 3 mm
WEIGHT CAPACITY 661 lbs (300 KG)

FF-GHD20



GHD Glute Ham Developer Roman Chair

MATERIAL 11 Gauge Steel **WEIGHT** 143.3 lbs (65 kg)
DIMENSIONS 67.72" × 40.16" × 47.24" (172cm × 102cm ×
WEIGHT CAPACITY 660 lbs (300 kg)
VINYL COLOR Black
STEEL TUBE SIZE 50 mm × 50 mm × 3 mm
COLOR Black

FRENCH FITNESS

05

CAGES, RACKS & RIGS

FF-R1



R1 Dual Adjustable Squat Stand / Rack

MATERIAL Steel **WIDTH** 25" (63.5 cm) **HEIGHT** 67" (1701 cm)
COLOR Black



FF-R4

R4 Half Rack

MATERIAL 14 Gauge Steel
LENGTH 42" (106.7 cm)
WIDTH 49" (124.5 cm)
HEIGHT 81" (205.7 cm)
TUBE SIZE 60 × 60 mm thickness 2mm Steel tube
WEIGHT 111.3lbs (50.5 kg)
COLOR Black

FF-R5



R5 Half Rack

MATERIAL 14 Gauge Steel **LENGTH** 47" (119.3 cm)
WIDTH 36" (91.4 cm) **HEIGHT** 73" (185.4 cm)
TUBE SIZE 2" × 2" × 0.08" (50 × 50 × 2mm) **COLOR** Black



FF-BRC10

Multi Bench / Half Rack Combo

MATERIAL 14 Gauge Steel
R4 HALF RACK DEMENSIONS 42" × 49" × 81" (106.6cm × 124.4cm × 205.7cm)
BENCH DEMENSIONS 73"L × 28"W × 32"H (185.4cm × 71cm × 81cm)
R4 HALF RACK TUBE SIZE 60 × 60 mm thickness 2mm Steel tube
R4 HALF RACK WEIGHT 111.3lbs (50.5kg)
BENCH WEIGHT 110 lbs (50 kg)
COLOR Black



FFT-HCR

Tahoe Half Cage / Rack

LENGTH:
59.5" (151 cm)

MATERIAL:
11 Gauge Steel

WIDTH:
74.5" (189 cm)

TUBE SIZE:
3" (75mm) × 3" (75mm)

HEIGHT:
94.75" (240.6 cm)

COLOR:
Black



FF-R8

R8 Half Cage / Squat Rack

LENGTH:
55.51" (140.9 cm)

MATERIAL:
14 Gauge Steel

WIDTH:
66" (167.6 cm) - if band pegs are installed

TUBE SIZE:
2.95" × 2.95" × .08"

HEIGHT:
92.12" (233.9 cm)

COLOR:
Black

FF-R20



Full Squat Rack / Power Cage w/Bar

MATERIAL:
11 Gauge Steel

TUBE SIZE:
75 × 75 × 3mm

LENGTH:
39.3" (99.8 cm)

WEIGHT:
275.5lb (125kg)

WIDTH:
48.8" (123.9 cm)

COLOR:
Black

HEIGHT:
89.3" (226.8 cm)

FFB-OSR



Black Olympic Squat Rack

MATERIAL:
11 Gauge Steel

LENGTH:
71.5" (181.6 cm)

WIDTH:
60.5" (153.7 cm)

HEIGHT:
76.5" (194.3 cm)

TUBE SIZE:
3mm Flat oval steel tube, 65 × 114mm thickness

COLOR:
Black

FFS-OSR



Silver Olympic Squat Rack

MATERIAL:
11 Gauge Steel

LENGTH:
71.5" (181.6 cm)

WIDTH:
60.5" (153.7 cm)

HEIGHT:
76.5" (194.3 cm)

TUBE SIZE:
3mm Flat oval steel tube, 65 × 114mm thickness

COLOR:
Silver

FFN-HDEHR



Napa HD Elite Half Rack

MATERIAL:
Steel

LENGTH:
54" (137 cm)

WIDTH:
75" (190.5 cm)

HEIGHT:
88.75" (225.4 cm)

WEIGHT:
485 lb (220 kg)

COLOR:
Silver

FFT-PCFR



Tahoe Power Cage / Full Rack

MATERIAL:
11 Gauge Steel

LENGTH:
77.5" (196.8 cm)

WIDTH:
69" (175 cm)

HEIGHT:
94.3" (239.5 cm)

TUBE SIZE:
75mm × 75mm × 3mm

COLOR:
Black



FF-R6

R6 Cross Training Squat Stand

MATERIAL 11 Gauge Steel

LENGTH 72" (182.9 cm)

WIDTH 47" (119.3 cm)

HEIGHT 94" (238.7 cm)

TUBE SIZE 2" × 2" × 0.11" (60 × 60 × 3mm)

WEIGHT 177 lbs (80 kg)

COLOR Black



FF-R10

R10 Cross Training Squat Stand

MATERIAL 11 Gauge Steel

LENGTH 72" (182.9 cm)

WIDTH 47" (119.3 cm)

HEIGHT 94" (238.7 cm)

TUBE SIZE 3" × 3" × 0.11" (75 × 75 × 3mm)

WEIGHT 177 lbs (80 kg)

COLOR Black



FF-SRFT8

Squat Rack Functional Trainer

MATERIAL Steel

LENGTH 51.49" (130.8 cm)

WIDTH 49.80" (126.5 cm)

HEIGHT 86.57" (219.9 cm)

WEIGHT 753 lb (341.5 kg)

COLOR Black



FF-FCPRC

Folding Cable Power Rack / Cage

MATERIAL 14 Gauge Steel

WEIGHT 342 lbs (155.13 kg)

FOLDED DEMENSIONS 67.63" × 29" × 90.43" (171.8cm × 73.7.5cm × 229.7cm)

UNFOLDED DEMENSIONS 67.63" × 64.78" × 90.43" (171.8cm × 164.5cm × 229.7cm)

TUBE SIZE ASTM A36 60 mm × 60 mm × 2 mm

COLOR Black, Red/Black

FF-RIG1



Wall Mount Rig & Rack System 1

LENGTH: 45.5" (115.5 cm)
WIDTH: 48.5" (123 cm)
HEIGHT: 108.2" (274.83 cm)

MATERIAL: 11 Gauge Steel
STEEL TUBE SIZE: 75 mm × 75 mm × 3 mm

HOLE SIZE/SPACING:
Hole Size (For Rig & Rack Attachments): 1" (25.4 mm)
Hole Spacing: Center to Center: 2" (50.8 mm)

FF-RIG2



Free Standing Rig & Rack System 2

LENGTH: 48.5" (123 cm)
WIDTH: 48.5" (123 cm)
HEIGHT: 108.2" (274.83 cm)

MATERIAL: 11 Gauge Steel
STEEL TUBE SIZE: 75 mm × 75 mm × 3 mm

HOLE SIZE/SPACING:
Hole Size (For Rig & Rack Attachments): 1" (25.4 mm)
Hole Spacing: Center to Center: 2" (50.8 mm)

FF-RIG3



Free Standing Rig & Rack System 3

LENGTH: 48.5" (123 cm)
WIDTH: 48.5" (123 cm)
HEIGHT: 108.2" (274.83 cm)

MATERIAL: 11 Gauge Steel
STEEL TUBE SIZE: 75 mm × 75 mm × 3 mm

HOLE SIZE/SPACING:
Hole Size (For Rig & Rack Attachments): 1" (25.4 mm)
Hole Spacing: Center to Center: 2" (50.8 mm)



FF-RIG5

Free Standing Rig & Rack System 5

MATERIAL:
11 Gauge Steel

STEEL TUBE SIZE:
75 mm × 75 mm × 3 mm

HOLE SIZE/SPACING:
Hole Size (For Rig & Rack Attachments): 1" (25.4 mm)
Hole Spacing: Center to Center: 2" (50.8 mm)



FF-RIG6

Free Standing Rig & Rack System 6

LENGTH:
48.5" (123 cm)

WIDTH:
241.6" (274.83 cm)

HEIGHT:
108.2" (274.83 cm)

MATERIAL:
11 Gauge Steel

STEEL TUBE SIZE:
75 mm × 75 mm × 3 mm

HOLE SIZE/SPACING:
Hole Size (For Rig & Rack Attachments): 1" (25.4 mm)
Hole Spacing: Center to Center: 2" (50.8 mm)

FF-RIG7



Wall Mounted Rig & Rack System 7

LENGTH:
45.5" (115.5 cm)

WIDTH:
48.5" (123 cm)

HEIGHT:
108.2" (274.83 cm)

MATERIAL:
11 Gauge Steel

STEEL TUBE SIZE:
75 mm × 75 mm × 3 mm

HOLE SIZE/SPACING:
Hole Size (For Rig & Rack Attachments): 1" (25.4 mm)
Hole Spacing: Center to Center: 2" (50.8 mm)

FF-RIG8



Wall Mounted Rig & Rack System 8

LENGTH: 45.5" (115.5 cm)

WIDTH: 122.3" (310.5 cm)

HEIGHT: 108.2" (274.83 cm)

MATERIAL: 11 Gauge Steel

STEEL TUBE SIZE: 75 mm × 75 mm × 3 mm

HOLE SIZE/SPACING:
Hole Size (For Rig & Rack Attachments): 1" (25.4 mm)
Hole Spacing: Center to Center: 2" (50.8 mm)

FF-RIG9



Free Standing Rig & Rack System 9

MATERIAL:
11 Gauge Steel

STEEL TUBE SIZE:
75 mm × 75 mm × 3 mm

HOLE SIZE/SPACING:
Hole Size (For Rig & Rack Attachments): 1" (25.4 mm)
Hole Spacing: Center to Center: 2" (50.8 mm)

FF-RIG10



Free Standing Rig & Rack System 10

MATERIAL:
11 Gauge Steel

STEEL TUBE SIZE:
75 mm × 75 mm × 3 mm

HOLE SIZE/SPACING:
Hole Size (For Rig & Rack Attachments): 1" (25.4 mm)
Hole Spacing: Center to Center: 2" (50.8 mm)

FF-RIG11



Free Standing Rig & Rack System 11

MATERIAL:
11 Gauge Steel

STEEL TUBE SIZE:
75 mm × 75 mm × 3 mm

HOLE SIZE/SPACING:
Hole Size (For Rig & Rack Attachments): 1" (25.4 mm)
Hole Spacing: Center to Center: 2" (50.8 mm)

FF-RIG20

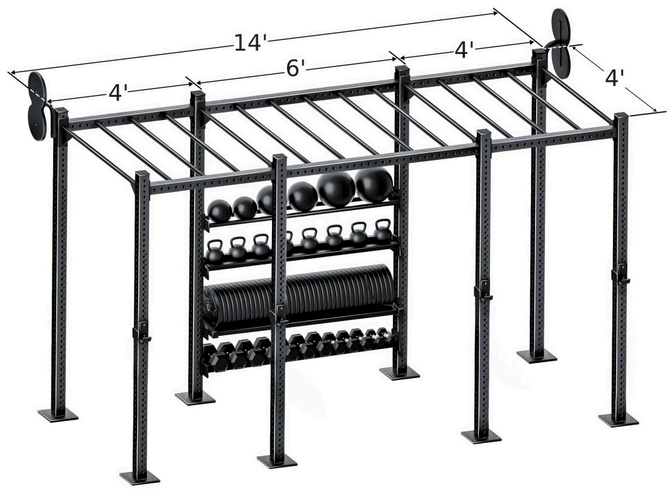

Free Standing Rig & Rack System 11

LENGTH:
48.5" (123 cm)

WIDTH:
167.8" (426.21 cm)

HEIGHT:
108.2" (274.83 cm)

MATERIAL:
11 Gauge Steel

STEEL TUBE SIZE:
75 mm × 75 mm × 3 mm

HOLE SIZE/SPACING:
Hole Size (For Rig & Rack Attachments): 1" (25.4 mm)
Hole Spacing: Center to Center: 2" (50.8 mm)

FF-RIG21

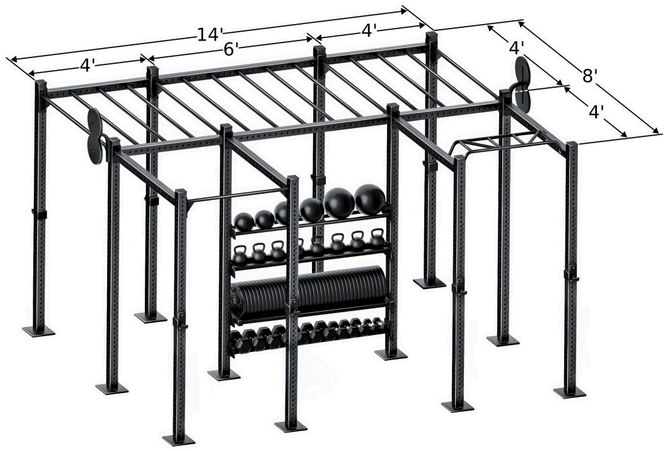

Free Standing Rig & Rack System 21

LENGTH:
94" (238.76 cm)

WIDTH:
167.8" (426.21 cm)

HEIGHT:
108.2" (274.83 cm)

MATERIAL:
11 Gauge Steel

STEEL TUBE SIZE:
75 mm × 75 mm × 3 mm

HOLE SIZE/SPACING:
Hole Size (For Rig & Rack Attachments): 1" (25.4 mm)
Hole Spacing: Center to Center: 2" (50.8 mm)

FF-RIG22



Free Standing Rig & Rack System 22

LENGTH: 48.5"
WIDTH: 76.8" (cm)
HEIGHT: 108.2" (cm)

HOLE SIZE/SPACING:
Hole Size: 1" (25.4 mm)
Hole Spacing (Center to Center): 2" (50.8 mm)

FF-RIG23

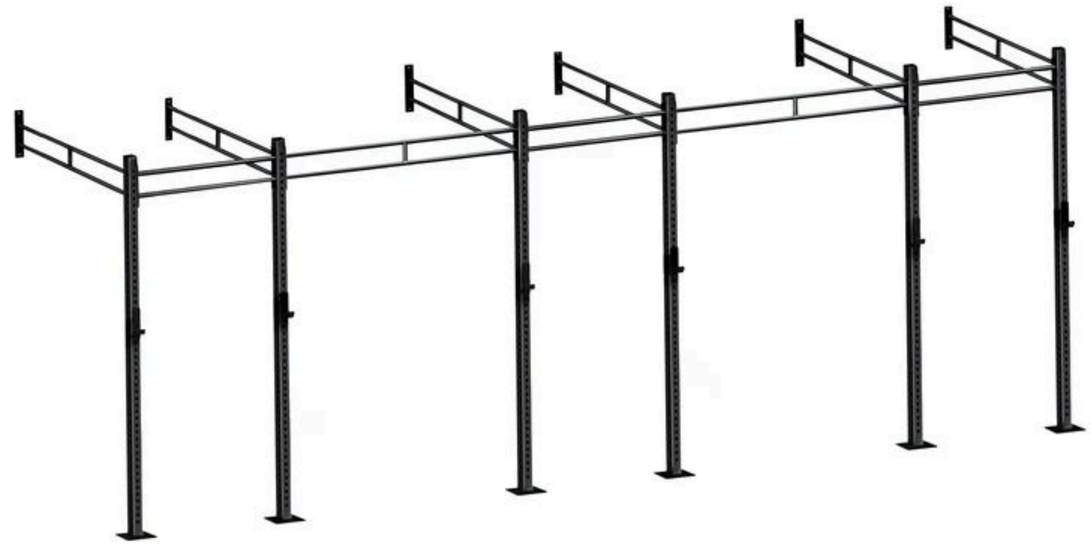

Wall Mount Rig & Rack System 23

LENGTH: 48.5"
WIDTH: 73.8" (cm)
HEIGHT: 108.2" (cm)

HOLE SIZE/SPACING:
Hole Size: 1" (25.4 mm)
Hole Spacing (Center to Center): 2" (50.8 mm)



FF-4TSSR-2

Tier Storage Squat Rack Pull Up - 2 Sections 107"

LENGTH: 32" (81.2 cm)
WIDTH: 106.9" (271.5 cm)
HEIGHT: 89.8" (228 cm)

MATERIAL: 11 Gauge Steel
STEEL TUBE SIZE: 75 mm × 75 mm × 3 mm

HOLE SIZE/SPACING:
Hole Size: 1" (25.4 mm)
Hole Spacing (Center to Center): 2" (50.8 mm)



FF-4TSSR-3

4 Tier Storage Squat Rack Pull Up - 3 Sections 157"

LENGTH: 32" (81.2 cm)
WIDTH: 106.9" (271.5cm)
HEIGHT: 89.8" (228cm)

MATERIAL: 11 Gauge Steel
STEEL TUBE SIZE: 75 mm × 75 mm × 3 mm

HOLE SIZE/SPACING:
Hole Size: 1" (25.4 mm)
Hole Spacing (Center to Center): 2" (50.8 mm)

FF-4TSSR



4 Tier Storage Squat Rack Pull Up

LENGTH: 32" (81.2 cm)
WIDTH: 56.7" (144 cm)
HEIGHT: 89.8" (228 cm)

MATERIAL: 11 Gauge Steel
STEEL TUBE SIZE: 75 mm × 75 mm × 3 mm

HOLE SIZE/SPACING:
Hole Size: 1" (25.4 mm)
Hole Spacing (Center to Center): 2" (50.8 mm)

FF-DHR80



Double Half Rack / Cage

LENGTH: 100" (254 cm)
WIDTH: 68.5" (174 cm)
HEIGHT: 98" (248.92 cm)

MATERIAL: 11 Gauge Steel
STEEL TUBE SIZE: 75 mm × 75 mm × 3 mm

HOLE SIZE/SPACING:
Hole Size: 1" (25.4 mm)
Hole Spacing (Center to Center): 2" (50.8 mm)



FF-RR-FT-3TS49

Rig & Rack Functional Trainer w/3 Tier Storage 49"

LENGTH: 37" (94 cm)
WIDTH: 49" (124.5 cm)
HEIGHT: 91" (231 cm)

MATERIAL: 11 Gauge Steel
STEEL TUBE SIZE: 75 mm × 75 mm × 3 mm

HOLE SIZE/SPACING:
Hole Size: 1" (25.4 mm)
Hole Spacing (Center to Center): 2" (50.8 mm)



FF-RR-FT-3TS78

Rig & Rack Functional Trainer w/3 Tier Storage 78"

LENGTH: 79" (200 cm)
WIDTH: 37" (94 cm)
HEIGHT: 91" (231 cm)

MATERIAL: 11 Gauge Steel
STEEL TUBE SIZE: 75 mm × 75 mm × 3 mm

HOLE SIZE/SPACING:
Hole Size: 1" (25.4 mm)
Hole Spacing (Center to Center): 2" (50.8 mm)

FF-RR-FT-CAVE



Rig & Rack Functional Training Cave

DIMENSIONS:
With weight horns: 39.4" × 164" × 90" (416.5 cm × 100 cm × 228.9 cm)
W/o weight horns: 143.38" × 39.4" × 90" (364.2 cm × 100 cm × 228.9 cm)

MATERIAL: Steel

STEEL TUBE SIZE: 75 mm × 75 mm × 3 mm

HOLE SIZE/SPACING:
Hole Size: 1" (25.4 mm)
Hole Spacing (Center to Center): 2" (50.8 mm)

FF-SHR80



Single Half Rack / Cage

LENGTH: 58" (147.32 cm)

WIDTH: 56" (142.24 cm)

HEIGHT: 98" (248.92 cm)

MATERIAL: 11 Gauge Steel

STEEL TUBE SIZE: 75 mm × 75 mm × 3 mm

HOLE SIZE/SPACING:
Hole Size: 1" (25.4 mm)
Hole Spacing (Center to Center): 2" (50.8 mm)

FF-SHR80-MAB30



Commercial Half Rack / Bench Combo

LENGTH: 53" (135.2 cm)
WIDTH: 31" (78.3 cm)
HEIGHT: 53" (134 cm)

MATERIAL: 11 Gauge Steel
STEEL TUBE SIZE: 75 mm × 75 mm × 3 mm

HOLE SIZE/SPACING:
Hole Size: 1" (25.4 mm)
Hole Spacing (Center to Center): 2" (50.8 mm)

FF-WMR10



Wall Mounted Foldable Squat Rack WMR10

LENGTH: 23.6" (60 cm)
WIDTH: 47.2" (120 cm)
HEIGHT: 90.5" (230 cm)

MATERIAL: Steel
STEEL TUBE SIZE: 75 mm × 75 mm × 3 mm

WEIGHT: 134 lbs (61 kg)
HOLE SIZE/SPACING: Hole Size: 1" (25.4 mm)
Hole Spacing (Center to Center): 2" (50.8 mm)



FFM-R30

Monster Power Rack

LENGTH: 48.5" (124 cm)
WIDTH: 48.5" (124 cm)
HEIGHT: 90.5" (230 cm)

MATERIAL: Steel
STEEL TUBE SIZE: 75 mm × 75 mm × 3 mm

HOLE SIZE/SPACING:
Hole Size: 1" (25.4 mm)
Hole Spacing (Center to Center): 2" (50.8 mm)



FFM-R30-MAB30

Rig & Rack R30-DSPR Monster Dual Storage Power Rack

LENGTH: 53" (135.2 cm)
WIDTH: 31" (78.3 cm)
HEIGHT: 53" (135.2 cm)

MATERIAL: 11 Gauge Steel
STEEL TUBE SIZE: 75 mm × 75 mm × 3 mm

HOLE SIZE/SPACING:
Hole Size: 1" (25.4mm)
Hole Spacing (Center to Center): 2" (50.8 mm)

FFM-R30-3Dsmith



Monster 3D Dual Action Smith Rack

LENGTH: 48.5" (124 cm)
WIDTH: 48.5" (124 cm)
HEIGHT: 90.5"H (230 cm)

MATERIAL: 11 Gauge Steel
STEEL TUBE SIZE: 75 mm × 75 mm × 3 mm

HOLE SIZE/SPACING:
Hole Size: 1" (25.4 mm)
Hole Spacing (Center to Center): 2" (50.8 mm)

FFM-R30-RE



Monster Power Rack

LENGTH: 75.9" (193 cm)
WIDTH: 48.8" (124 cm)
HEIGHT: 89.7" (228 cm)

MATERIAL: 11 Gauge Steel
STEEL TUBE SIZE: 75 mm × 75 mm × 3 mm

HOLE SIZE/SPACING:
Hole Size: 1" (25.4 mm)
Hole Spacing (Center to Center): 2" (50.8 mm)

FFM-R30-RE-LPLW



Commercial Power Rack w/Lat Pulldown / Low Row

LENGTH: 48.5"(124 cm)
WIDTH: 48.5"(124 cm)
HEIGHT: 90.5" (230 cm)

MATERIAL: 11 Gauge Steel
STEEL TUBE SIZE: 75 mm × 75 mm × 3 mm

HOLE SIZE/SPACING:
Hole Size: 1" (25.4 mm)
Hole Spacing (Center to Center): 2" (50.8 mm)

FF-RR-CC



Rack & Rig Cable Column

MATERIAL 11 Gauge Steel

HOLE SIZE/SPACING Hole Size: 1" (25.4 mm)
Hole Spacing (Center to Center): 2" (50.8 mm)

LENGTH 57.7" (146.73 cm) **WIDTH** 36.2" (92.1 cm)

HEIGHT 91" (231.25 cm)

DIMENSIONS - OTHER
Tube Size of Post Required to Attach to: 3" x 3" (75 mm x 75 mm)
Peg Diameter (To Attach to Rig & Rack Pre-Configured Rigs, or Rig & Rack Frame Pieces): 1"

FF-RR-CC-FSLPLR



Rack & Rig Free Standing Lat Pulldown / Low Row

MATERIAL 11 Gauge Steel

HOLE SIZE/SPACING Hole Size: 1" (25.4 mm)
Hole Spacing (Center to Center): 2" (50.8 mm)

LENGTH 57.7" (146.73 cm)

WIDTH 36.2" (92.1 cm)

HEIGHT 91" (231.25 cm)

FF-RR-LPLW



Rig & Rack Lat Pulldown / Low Row w/ Stabilizer Bar

MATERIAL 11 Gauge Steel

STEEL TUBE SIZE
3" × 3" × 0.11" (7.5 cm × 7.5 cm × 0.3 cm)

LENGTH 42.5" (108 cm)

DIMENSIONS - OTHER
Tube Size of Post Required to Attach to: 3" x 3" (75 mm x 75 mm)
Peg Diameter (To Attach to Rig & Rack Pre-Configured Rigs, or Rig & Rack Frame Pieces): 1"

FF-PLPPCTS



Plate Loaded Pulldown Portable Cable Trainer Slinger

MATERIAL Steel

FF-RR-RMCC



Rack & Rig Rack Mounted Cable Column

LENGTH:	WIDTH:	HEIGHT:
3" (7.62 cm)	33.4" (84.33 cm)	91" (231.25 cm)

MATERIAL:	HOLE SIZE/SPACING:
11 Gauge Steel	Hole Size: 1" (25.4 mm) Hole Spacing (Center to Center): 2" (50.8 mm)

FF-RR-RMCC-LSFR



Rack & Rig Rack Mounted Cable Column w/Lat Seat and Row Attachment

LENGTH:	WIDTH:	HEIGHT:
15.7" (39.88 cm)	36.2" (92.1 cm)	92.1" (231.25 cm)

MATERIAL:	HOLE SIZE/SPACING:
11 Gauge Steel	Hole Size: 1" (25.4 mm) Hole Spacing (Center to Center): 2" (50.8 mm)

FF-RR-BPR-43

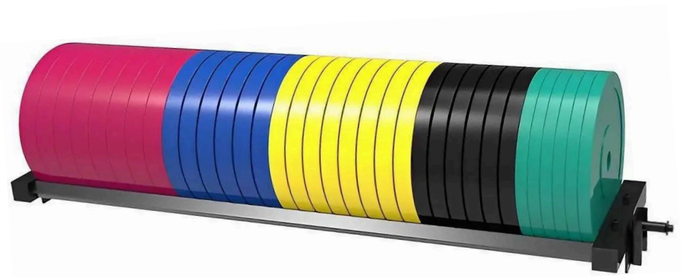

43" Rack & Rig Bumper Plate Tier/Tray Attachment

MATERIAL 11 Gauge Steel **LENGTH** 42.5" (108 cm) **WEIGHT** 43.21

DIMENSIONS - OTHER
Tube Size of Post Required to Attach to: 3" × 3" (75 mm x 75 mm)
Peg Diameter (To Attach to Rig & Rack Pre-Configured Rigs, or Rig & Rack Frame Pieces): 1"

FF-RR-BPR-47

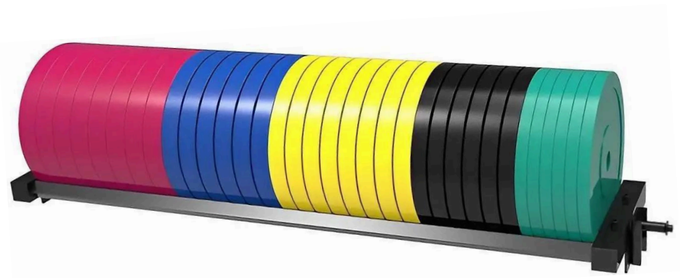

47" Rack & Rig Bumper Plate Tier/Tray Attachment

MATERIAL 11 Gauge Steel **LENGTH** 47.24" (120 cm) **WEIGHT** 26.5

DIMENSIONS - OTHER
Tube Size of Post Required to Attach to: 3" × 3" (75 mm x 75 mm)
Peg Diameter (To Attach to Rig & Rack Pre-Configured Rigs, or Rig & Rack Frame Pieces): 1"

FF-RR-BR-43



43" Rack & Rig Ball Tier/Tray Attachment

MATERIAL 11 Gauge Steel **LENGTH** 42.5" (108 cm) **WEIGHT** 19.8

DIMENSIONS - OTHER
Tube Size of Post Required to Attach to: 3" × 3" (75 mm x 75 mm)
Peg Diameter (To Attach to Rig & Rack Pre-Configured Rigs, or Rig & Rack Frame Pieces): 1"

FF-RR-BR-47

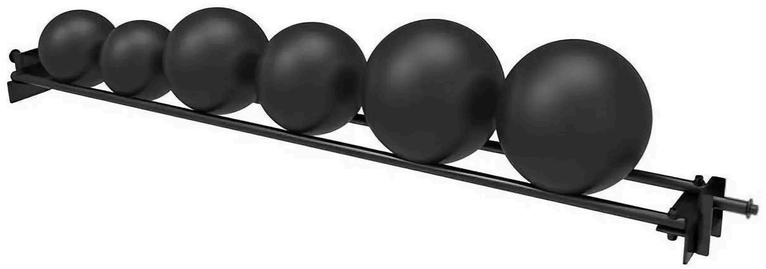

47" Rack & Rig Ball Tier/Tray Attachment

MATERIAL 11 Gauge Steel **LENGTH** 47.24" (120 cm) **WEIGHT** 14.3

DIMENSIONS - OTHER
Tube Size of Post Required to Attach to: 3" x 3" (75 mm × 75 mm)
Peg Diameter (To Attach to Rig & Rack Pre-Configured Rigs, or Rig & Rack Frame Pieces): 1"

FF-RR-BPR-71

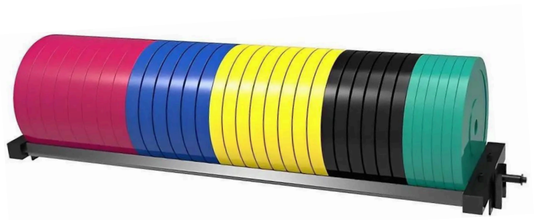

71" Rack & Rig Bumper Plate Tier/Tray Attachment

MATERIAL 11 Gauge Steel **LENGTH** 70.8" (179.8 cm) **WEIGHT** 57.3

DIMENSIONS - OTHER
Inside Rack Length: 72" (182.9 cm)
Total Length (including Connectors): 74" (188 cm)
Tube Size of Post Required to Attach to: 3" x 3" (75 mm × 75 mm)
Peg Diameter (To Attach to Rig & Rack Pre-Configured Rigs, or Rig & Rack Frame Pieces): 1"

FF-RR-BR-71



71" Rack & Rig Ball Tier/Tray Attachment

MATERIAL 11 Gauge Steel **LENGTH** 70.8" (179.8 cm) **WEIGHT** 19.8

DIMENSIONS - OTHER
Inside Rack Length: 72" (182.9 cm)
Total Length (including Connectors): 74" (188 cm)
Tube Size of Post Required to Attach to: 3" x 3" (75 mm × 75 mm)
Peg Diameter (To Attach to Rig & Rack Pre-Configured Rigs, or Rig & Rack Frame Pieces): 1"

FF-RR-DBR-71



71" Rack & Rig Dumbbell Tier/Tray Attachment

MATERIAL 11 Gauge Steel **LENGTH** 70.8" (179.8 cm) **WEIGHT** 49.6

DIMENSIONS - OTHER
Inside Rack Length: 72" (182.9 cm)
Total Length (including Connectors): 74" (188 cm)
Tube Size of Post Required to Attach to: 3" x 3" (75 mm × 75 mm)
Peg Diameter (To Attach to Rig & Rack Pre-Configured Rigs, or Rig & Rack Frame Pieces): 1"

FF-RR-KBR-71



71" Rack & Rig Kettlebell Tier/Tray Attachment

MATERIAL 11 Gauge Steel **LENGTH** 70.8" (179.8 cm) **WEIGHT** 50.7

DIMENSIONS - OTHER
Inside Rack Length: 72" (182.9 cm)
Total Length (including Connectors): 74" (188 cm)
Tube Size of Post Required to Attach to: 3" x 3" (75 mm × 75 mm)
Peg Diameter (To Attach to Rig & Rack Pre-Configured Rigs, or Rig & Rack Frame Pieces): 1"

FF-RR-DBR-43



43" Rack & Rig Dumbbell Tier/Tray Attachment

MATERIAL 11 Gauge Steel **LENGTH** 42.5" (108 cm) **WEIGHT** 35.3

DIMENSIONS - OTHER
Tube Size of Post Required to Attach to: 3" × 3" (75 mm × 75 mm)
Peg Diameter (To Attach to Rig & Rack Pre-Configured Rigs, or Rig & Rack Frame Pieces): 1"

FF-RR-DBR-47



47" Rack & Rig Dumbbell Tier/Tray Attachment

MATERIAL 11 Gauge Steel **LENGTH** 47.24" (120 cm) **WEIGHT** 35.3

DIMENSIONS - OTHER
Tube Size of Post Required to Attach to: 3" × 3" (75 mm × 75 mm)
Peg Diameter (To Attach to Rig & Rack Pre-Configured Rigs, or Rig & Rack Frame Pieces): 1"

FF-RR-KBR-43



43" Rack & Rig Kettlebell Tier/Tray Attachment

MATERIAL 11 Gauge Steel **LENGTH** 42.5" (108 cm) **WEIGHT** 26.5

DIMENSIONS - OTHER
Tube Size of Post Required to Attach to: 3" × 3" (75 mm × 75 mm)
Peg Diameter (To Attach to Rig & Rack Pre-Configured Rigs, or Rig & Rack Frame Pieces): 1"

FF-RR-KBR-47



47" Rack & Rig Kettlebell Tier/Tray Attachment

MATERIAL 11 Gauge Steel **LENGTH** 47.24" (120 cm) **WEIGHT** 26.5

DIMENSIONS - OTHER
Tube Size of Post Required to Attach to: 3" × 3" (75 mm × 75 mm)
Peg Diameter (To Attach to Rig & Rack Pre-Configured Rigs, or Rig & Rack Frame Pieces): 1"

FF-RR-MBA



Rack & Rig Monkey Bar Attachment

MATERIAL Steel

HOLE SIZE/SPACING Hole Size: 1" (25.4 mm)
Hole Spacing (Center to Center): 2" (50.8 mm)

DIMENSIONS - OTHER
Tube Size of Post Required to Attach to: 3" × 3" (75 mm × 75 mm)
Peg Diameter (To Attach to Rig & Rack Pre-Configured Rigs, or Rig & Rack Frame Pieces): 1"

FF-RR-MGPUB



Rack & Rig Multi Grip Pull Up Bar

MATERIAL 11 Gauge Steel **LENGTH** 42.5" (108 cm)

HOLE SIZE/SPACING Hole Size: 1" (25.4 mm)
Hole Spacing (Center to Center): 2" (50.8 mm)

DIMENSIONS - OTHER
Tube Size of Post Required to Attach to: 3" × 3" (75 mm × 75 mm)
Peg Diameter (To Attach to Rig & Rack Pre-Configured Rigs, or Rig & Rack Frame Pieces): 1"

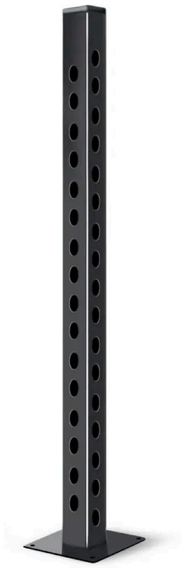

FF-MSS-U29

29" Rack & Rig Upright

MATERIAL 11 Gauge Steel

STEEL TUBE SIZE 75 mm × 75 mm × 3 mm

HOLE SIZE/SPACING Hole Size: 1" (25.4 mm)
Hole Spacing (Center to Center): 2" (50.8 mm)

LENGTH 3" (7.62 cm)

WIDTH 3" (7.62 cm)

HEIGHT 29" (73.66 cm)

WEIGHT 52.9 lbs (24 kg)



FF-MSS-U45

45" Rack & Rig Upright

MATERIAL 11 Gauge Steel

STEEL TUBE SIZE 75 mm × 75 mm × 3 mm

HOLE SIZE/SPACING Hole Size: 1" (25.4 mm)
Hole Spacing (Center to Center): 2" (50.8 mm)

LENGTH 3" (7.62 cm)

WIDTH 3" (7.62 cm)

HEIGHT 45.25" (115 cm)

WEIGHT 52.9 lbs (24 kg)

FF-RR-AJB-43



43" Rack & Rig Angled Junction Bar

STEEL TUBING 11 Gauge Steel, 75 mm × 75 mm × 3 mm

HOLE DIAMETER 1" **HOLE SPACING:** 2"

LENGTH 42.5" (108 cm) **WEIGHT** 25.4 lbs (11.5 kg)

FF-RR-AJB-71



71" Rack & Rig Angled Junction Bar

STEEL TUBING 11 Gauge Steel, 75 mm × 75 mm × 3 mm

HOLE SIZE 1" **HOLE SPACING:** 2" **LENGTH** 70.8" (179.8 cm)

WEIGHT 36.4 lbs (16.5 kg)

FF-RR-DPB-43



43" Rack & Rig Double Pull Up Bar

MATERIAL 11 Gauge Steel **HOLE DIAMETER** 1"

LENGTH 43" (109 cm) **WEIGHT** 17.6 lbs (8 kg)

FF-RR-DPB-71

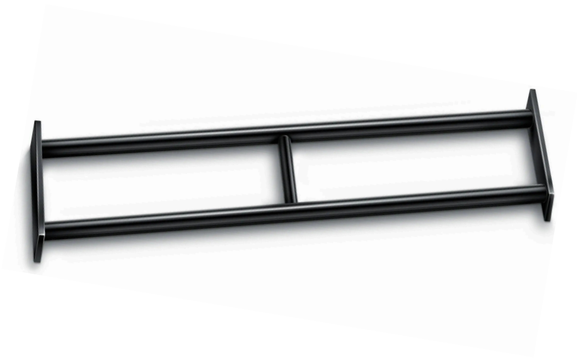

71" Rack & Rig Double Pull Up Bar

MATERIAL 11 Gauge Steel **HOLE DIAMETER** 1"

LENGTH 70.8" (179.8 cm) **WEIGHT** 61.7 (28 kg)

FF-RR-DSBA-43



43" Rack & Rig Dirty South Bar Attachment

MATERIAL 11 Gauge Steel **HOLE DIAMETER** 1"

LENGTH 42.5" (108 cm) **WEIGHT** 39.7 lbs (18 kg)

FF-RR-DSBA-71

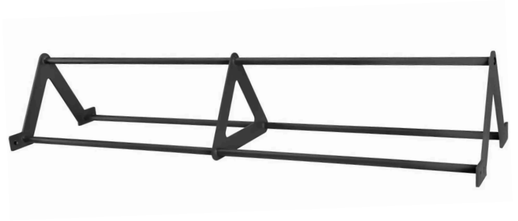

71" Rack & Rig Dirty South Bar Attachment

MATERIAL 11 Gauge Steel **HOLE DIAMETER** 1"

LENGTH 70.8" (179.8 cm) **WEIGHT** 114.6 lbs (52 kg)



FF-RR-FPBA

Rack & Rig Fly Pull Up Bar Attachment

MATERIAL 11 Gauge Steel

RACK STEEL TUBING REQUIRED 3" x 3" x 3mm

RACK HOLE SPECS REQUIRED 1" Holes, 2" Spacing

WIDTH 42.5" (108 cm)

WEIGHT 55.1 lbs (25 kg)

FF-RR-JB-43-V2PU



Rack & Rig Junction Bar 43" Pull Up Bar V2

MATERIAL 11 Gauge Steel

HOLE SIZE/SPACING
Hole Diameter (For Rig & Rack Attachments): 1" (25.4 mm)
Hole Spacing (Center to Center): 2" (50.8 mm)

LENGTH 42.5" (108 cm) **WEIGHT** 14 lbs (6.35 kg)



FF-RR-JB-UCB

Rack & Rig Junction Bar Crossmember w/Chin Up Bar

MATERIAL 11 Gauge Steel

HOLE SIZE/SPACING Hole Size: 1" (25.4 mm)
Hole Spacing (Center to Center): 2" (50.8 mm)

LENGTH 42.5" (108 cm)

WIDTH 9.5" (16.6 cm)

HEIGHT 3" (7.5 cm)

WEIGHT 35.6 lbs (16.16 kg)

FF-RR-JB-71-V2PU



Rack & Rig Junction Bar 71" Pull Up Bar V2

MATERIAL 11 Gauge Steel

HOLE SIZE/SPACING Hole Size: 1" (25.4 mm)
Hole Spacing (Center to Center): 2" (50.8 mm)

LENGTH 70.8" (179.8 cm) **WEIGHT** 41.9 lbs (19 kg)

FF-RR-JBS-43-V1-CM



43" Rack & Rig Junction Bar Crossmember V1

STEEL TUBING 11 Gauge Steel, 75 mm × 75 mm × 3 mm
HOLE SIZE 1" **HOLE DIAMETER** 1" **HOLE SPACING:** 2"
LENGTH 42.5" (108 cm) **WEIGHT** 18 lbs (8.16 kg)

FF-RR-JBS-71-V1-CM



71" Rack & Rig Junction Bar Crossmember V1

STEEL TUBING 11 Gauge Steel, 75 mm × 75 mm × 3 mm
HOLE SIZE 1" **HOLE DIAMETER** 1" **HOLE SPACING:** 2"
LENGTH 70.8" (179.8 cm) **WEIGHT** 29 lbs (13.15 kg)

FF-RR-JBS-165-V1-CM



165" Rack & Rig Junction Bar Crossmember V1

STEEL TUBING 11 Gauge Steel, 75 mm × 75 mm × 3 mm
HOLE SIZE 1" **HOLE DIAMETER** 1" **HOLE SPACING:** 2"
LENGTH 165" (420 cm) **WEIGHT** 70.5 lbs (32 kg)

FF-RR-JBS-MCG



Rack & Rig Junction Bar Crossmember w/2 Cannonball Grips

MATERIAL 11 Gauge Steel **HOLE SIZE** 1" **HOLE SPACING:** 1"
LENGTH 42.5" (108 cm) **WIDTH** 3" (7.5 cm)
HEIGHT 3" (7.5 cm) **WEIGHT** 26.8 lbs (12.16 kg)

FF-RR-PB-43



43" Rack & Rig Pull Up Bar

MATERIAL 11 Gauge Steel **HOLE DIAMETER** 1"
LENGTH 42.5" (107.95 cm) **WIDTH** 2.94" (7.47 cm)
HEIGHT 5.875" (14.92 cm) **WEIGHT** 9.37 lbs (4.25 kg)
ROD DIAMETER 1.27" (32.20 mm)

FF-RR-PB-71



71" Rack & Rig Pull Up Bar

MATERIAL 11 Gauge Steel **HOLE SIZE** 1" **HOLE SPACING:** 2"
LENGTH 70.80" (179.8 cm) **WIDTH** 2.94" (7.47 cm)
HEIGHT 5.875" (14.92 cm) **WEIGHT** 14.33 lbs (6.5 kg)
ROD DIAMETER 1.27" (32.20 mm)

FF-RR-JBS-20-CM



Rack & Rig 20" Junction Bar Crossmember

STEEL TUBING 11 Gauge Steel, 75 mm × 75 mm × 3 mm
HOLE SIZE 1" **HOLE DIAMETER** 1" **LENGTH** 20.7" (52.5 cm)
WEIGHT 1.65 lbs (0.75 kg)

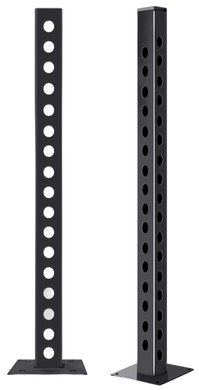

FF-RR-U-36

36" Rack & Rig Upright

STEEL TUBING 11 Gauge S
HOLE SIZE 1"
HOLE SPACING 2"
HEIGHT 35.75" (91 cm)
WEIGHT 17.6 lbs (8 kg)



FF-RR-U47

47" Rack & Rig Upright

STEEL TUBING 11 Gauge S
HOLE SIZE 1"
HOLE SPACING 2"
HEIGHT 47" (120 cm)
WEIGHT 19.8 lbs (kg)

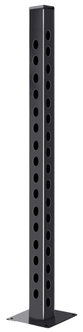

FF-RR-U-60

60" Rack & Rig Upright

STEEL TUBING 11 Gauge Steel, 75 mm × 75 mm × 3 mm

HOLE SIZE 1" **HOLE SPACING** 2"

HEIGHT 59.75" (152 cm)

WEIGHT 22.05 lbs (10 kg)



FF-RR-U-72

72" Rack & Rig Upright

STEEL TUBING 11 Gauge Steel, 75 mm × 75 mm × 3 mm

HOLE SIZE 1" **HOLE SPACING** 2"

HEIGHT 71.75" (182 cm)

WEIGHT 24.25 lbs (11 kg)



FF-RR-U-84

84" Rack & Rig Upright 7'

STEEL TUBING 11 Gauge Steel, 75 mm × 75 mm × 3 mm

HOLE SIZE 1" **HOLE SPACING** 2"

HEIGHT 83.75" (210 cm)

WEIGHT 28.66 lbs (13 kg)



FF-RR-U-91

91" Rack & Rig Upright

STEEL TUBING 11 Gauge Steel, 75 mm × 75 mm × 3 mm

HOLE SIZE 1" **HOLE SPACING** 2"

HEIGHT 90.55" (230 cm)

WEIGHT 33.07 lbs (15 kg)



FF-RR-U-108

108" Rack & Rig Upright

STEEL TUBING 11 Gauge Steel, 75 mm × 75 mm × 3 mm

HOLE SIZE 1" **HOLE SPACING** 2"

HEIGHT 108.2" (275 cm)

WEIGHT 39.68 lbs (18 kg)



FF-RR-U-120

120" Rack & Rig Upright

STEEL TUBING 11 Gauge Steel, 75 mm × 75 mm × 3 mm

HOLE SIZE 1" **HOLE SPACING** 2"

HEIGHT 120" (300 cm)

WEIGHT 50.71 lbs (23 kg)



FF-RR-U-130

130" Rack & Rig Upright

STEEL TUBING 11 Gauge Steel, 75 mm × 75 mm × 3 mm

HOLE SIZE 1"

HOLE SPACING 2"

HEIGHT 130" (330 cm)

WEIGHT 52.9 lbs (24 kg)



FF-RR-U-142

142" Rack & Rig Upright

STEEL TUBING 11 Gauge Steel, 75 mm × 75 mm × 3 mm

HOLE SIZE 1"

HOLE SPACING 2"

HEIGHT 141.7" (360 cm)

WEIGHT 59.52 lbs (27 kg)

FF-RR-MSGPUB



Rack & Rig Multi Sphere Ball Grip Pull Up Bar

MATERIAL 11 Gauge Steel **HOLE SIZE** 1" **HOLE SPACING:** 2"
LENGTH 48.5" (123.31 cm) **WIDTH** 22.6" (57.35 cm)
HEIGHT 6.5" (16.63 cm) **WEIGHT** 44.09 lbs (20 kg)

FF-RR-UCB



Rack & Rig Universal Chin Up Bar

MATERIAL 11 Gauge Steel **HOLE DIAMETER** 1"
LENGTH 39.4" (100 cm) **WIDTH** 6.5" (16.6 cm)
HEIGHT 3" (7.5 cm) **WEIGHT** 17.64 lbs (8 kg)

FF-RR-LBG



Rack & Rig Light Bulb Grip

MATERIAL Steel **LENGTH** 2.76" (7 cm)
WIDTH 2.76" (7 cm) **HEIGHT** 3.15" (8 cm)
WEIGHT 0.3 lb (0.1375 kg)

FF-RR-AH



Rack & Rig 11 Gauge A-Hanger Attachment

STEEL TUBE SIZE 75 mm × 75 mm × 3 mm
MATERIAL 11 Gauge Steel **HOLE DIAMETER** 1"
DISTANCE BETWEEN HOLES 1.75" **WEIGHT** 24.25 lbs (11 kg)

FF-RR-CC-SB2



Rack & Rig Cable Column Stabilizer Bar - Set of 2

STEEL TUBE SIZE 75 mm × 75 mm × 3 mm
MATERIAL 11 Gauge Steel **HOLE SIZE** 1" **HOLE SPACING:** 2"

FF-RR-PBH



Rack & Rig Power Band Holder

MATERIAL Steel **HOLE SIZE** 1" **HOLE SPACING:** 2"
LENGTH 30.32" (77 cm) **WIDTH** 14.57" (37 cm)
HEIGHT 4.33" (11 cm) **WEIGHT** 37.48 lbs (17 kg)

FF-RR-SA-V2HD



Rack & Rig V2 HD Spotter Arms Attachment (Pair)

MATERIAL 11 Gauge Steel **HOLE SPACING:** 2"
LENGTH 28.5" (72.39 cm) **WIDTH** 9" (22.8 cm)
HEIGHT 2.5" (31.7 cm) **WEIGHT** 35.75 lbs (16 kg)

FF-RR-SAA

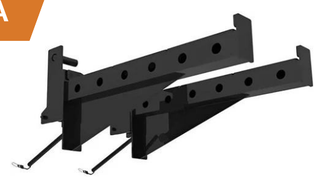

Rack & Rig Spotter Arms Attachment (Pair)

MATERIAL 11 Gauge Steel **HOLE SIZE** 1"
LENGTH 28.5" (72.39 cm) **WIDTH** 3.5" (8.89 cm)
HEIGHT 13" (33.02 cm) **WEIGHT** 17.2 lbs (3.27 kg)

FF-RR-DHA



Rack & Rig Dip Horn Attachment

MATERIAL 11 Gauge Steel **LENGTH** 29.53" (75 cm)
WIDTH 29.53" (75 cm) **HEIGHT** 9.45" (24 cm)
WEIGHT 24.25 lbs (11 kg)

FF-RR-RMUA-26MM



Ring Muscle Up Arm Attachment 26MM

MATERIAL 11 Gauge Steel
HOLE SIZE 1" **HOLE SPACING** 2"
LENGTH 43.5" (110.5 cm)
WIDTH 3" (7.6 cm)
HEIGHT 14" (35.6 cm)

FF-RR-SBHA



Rack & Rig Single Ball Holder Attachment

MATERIAL Steel
TUBE SIZE 3" x 3" (75 mm x 75 mm)
WEIGHT 11 lbs (5 kg)

FF-RR-CBG-S2



Rack & Rig Cannonball Grips with Straps - Set of 2

MATERIAL Steel, Nylon
PRODUCT DIAMETER 3" (7.62 cm)
STRAP LENGTH 12" (30.48 cm)
WEIGHT 1 lb (0.45 kg) each

FF-RR-WCH



Rack & Rig Weight Chain Hanger

MATERIAL 11 Gauge Steel
HOLE SIZE 1" **HOLE SPACING** 2"
LENGTH 17.5" (44.5 cm)
WIDTH 2.9"(7.6 cm)
HEIGHT 7.8" (20 cm)

FF-RR-BP



Rack & Rig Band Pegs - Set of 4

MATERIAL Steel
LENGTH 9.6" (24.5 cm)
HEIGHT 2.7" (7 cm) **PIN DIAMETER** 1"
PEG DIAMETER 1"

FF-RR-BHA



Rack & Rig Bar Holder Attachment

MATERIAL Steel
HOLE SIZE 1"
HOLE SPACING: 2"
WEIGHT 13.23 lbs (6 kg)

FF-RR-WCA



Rack & Rig Light Bulb Grip

MATERIAL Steel **STRAP WIDTH** 3" **HEIGHT** 6.69" (17 cm)
OVERALL STRAP LENGTH 41"
WORKING STRAP LENGTH
6" (also available in 42.5" as an option)

FF-RR-FRRA



Foot Rest Row Attachment

MATERIAL 11 Gauge Steel **HOLE DIAMETER** 1"
HOLE SPACING 4" **FOOT REST LENGTH** 15.7" (40 cm)
FOOT REST DIAMETER 1.9" (5 cm)
DISTANCE BETWEEN THE FOOT REST AND THE SLEEVE 4.7"
SLEEVE 3.1" x 3.3" (7.9 cm x 8.5 cm)
FOOT REST BAR WIDTH 1.9" (5 cm)

FF-RR-WBTA-V2



Rack & Rig V2 Wall Ball Target Attachment

MATERIAL Steel **HOLE SPACING** 2"
HOLE SIZE 1" **LENGTH** 14" (35.5 cm)
WIDTH 4.45" (11.3 cm)
HEIGHT 29.43" (74.75 cm)
WEIGHT 19.84 lbs (9 kg)

FF-RR-DWBT-V2



V2 Double Wall Ball Target Attachment

MATERIAL Steel **HOLE SPACING** 2"
HOLE SIZE 1" **LENGTH** 13.98" (35.5 cm)
WIDTH 4.45" (11.3 cm)
HEIGHT 46.65" (118.5 cm)
WEIGHT 27.56 lbs (12.5 kg)

FF-RR-GHD



Rack & Rig Glute Ham Attachment

MATERIAL Steel
TUBE SIZE 3" x 3" (75 mm x 75 mm)
WEIGHT 72.7 lbs (33 kg)

FF-RR-JAA



Rack & Rig Jammer Arms Attachment

MATERIAL Steel **HOLE SIZE** 1"
HOLE SPACING 2"
TUBE SIZE 3" x 3" (75 mm x 75 mm)
WEIGHT 99.21 lbs (45 kg)

FF-RR-JC



Rack & Rig J-Cups J-Hooks Attachment (Pair)

MATERIAL 11 Gauge Steel
LENGTH 8" (20.32 cm)
WIDTH 3.25" (8.26 cm)
HEIGHT 8.65" (21.97 cm)
WEIGHT 6 lbs (2.72 kg)

FF-RR-LA



Rack & Rig Landmine Attachment

MATERIAL Steel
LENGTH 14.57" (37 cm)
WIDTH 8.23" (21 cm)
HEIGHT 3.75" (9.5 cm)
WEIGHT 7.94 lbs (3.6 kg)

FF-RR-LRA



Rack & Rig Leg Roller Attachment

MATERIAL Steel, Leather, Foam
TUBE SIZE 3" x 3" (75 mm x 75 mm)
PEG DIAMETER 1"
WEIGHT 11 lbs (5 kg)

FF-RR-LS



Rack & Rig Lat Seat

MATERIAL 11 Gauge Steel, Leather, Foam
HOLE DIAMETER 1"
HOLE SPACING 4"
HEIGHT 8.65" (21.97 cm)
WEIGHT 26.5 lbs (12 kg)

FF-RR-MCG

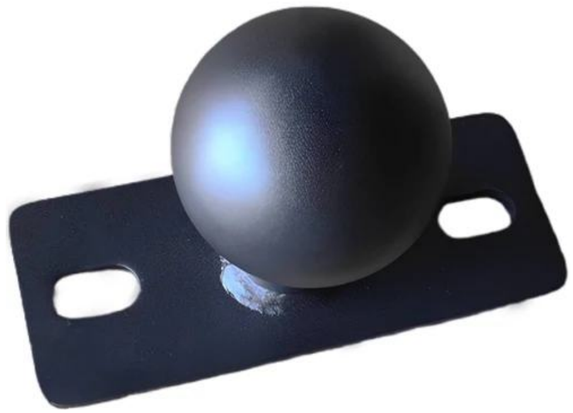

Rack & Rig Mounted Cannonball Grip

MATERIAL 11 Gauge Steel, Leather
HOLE SIZE 1" **HOLE SPACING** 2"
BALL DIAMETER 2.35" (6 cm)
LENGTH 7.87" (20 cm)
WIDTH 3" (7.6 cm)
HEIGHT 2.5" (6.35 cm)
WEIGHT 4.4 lbs (2 kg)

FF-RR-OWPH



Rack & Rig Olympic Weight Plate Holder

MATERIAL 11 Gauge Steel
HOLE DIAMETER 2"
LENGTH 17.32" (44 cm)
WIDTH 6.3" (16 cm)
HEIGHT 3.15" (8 cm)
WEIGHT 3.31 lbs (1.5 kg)

FF-RR-MDVBH

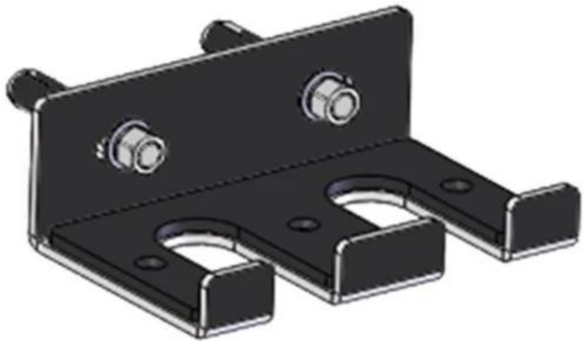

Rack & Rig Mounted Dual Vertical Bar Holder

MATERIAL Steel
HOLE SIZE 1"
HOLE SPACING 2"
PEG DIAMETER 1"
WEIGHT (W/O BOLTS) 2.6 lbs (1.2 k
WEIGHT (WITH BOLTS) 4.6 lbs (2 k

FF-RR-WSHA



14" Weight Storage Horn Attachment

TUBE SIZE 75 mm x 75 mm x 3 mm
LENGTH 8" (20.32 cm)
WIDTH 3.25" (8.26 cm)
HEIGHT 8.65" (21.97 cm)
MATERIAL 11 Gauge Steel
WEIGHT 99.21 lbs (45 kg)

FF-RR-PBG



Rack & Rig Pipe Bomb Grip

MATERIAL Steel
LENGTH 1.97" (5 cm)
WIDTH 1.97" (5 cm)
HEIGHT 7.48"H (19 cm)
WEIGHT 0.55 lbs (0.25 kg)

FF-RR-SPA

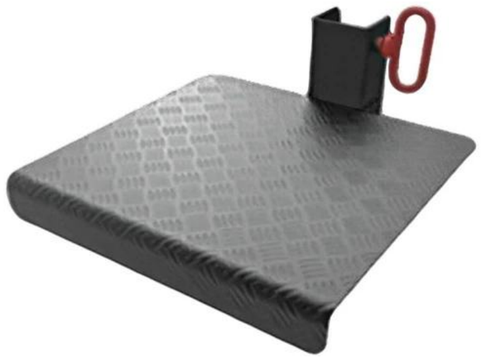

Rack & Rig Step-Up Platform Attachment

MATERIAL Steel
LENGTH 24" (61 cm)
WIDTH 21.65" (55 cm)
HEIGHT 12.6" (32 cm)
WEIGHT 29.76 lbs (13.5 kg)

FF-RR-UAA



Universal Anchor Attachment

MATERIAL 11 Gauge Steel **LENGTH** 11.4" (29 cm)
WIDTH 5.9" (15 cm) **HEIGHT** 2.3" (6 cm)
WEIGHT 5.5 lbs (2.5 kg)

FF-RR-SRP



Rack & Rig Seal Row Pad Attachment

HOLE DIAMETER 1" (25 mm) **HOLE SPACING** 2" (50 mm)
LENGTH 37.5" (95 cm) **WIDTH** 8.75" (22 cm)
HEIGHT 13" (35 cm) **WEIGHT** 44.1 lbs (20 kg)

FF-RR-HTBA

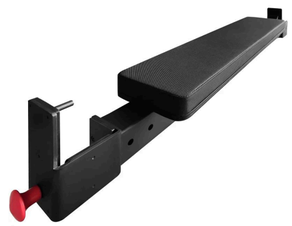

Rack & Rig Hip Thruster Bench Attachment

MATERIAL 11 Gauge Steel **HOLE SIZE** 1" (25.4mm)
HOLE SPACING 2" (50.8mm) **LENGTH** 45.8" (115.5 cm)
WIDTH 4" (10 cm) **HEIGHT** 8.8" (22.3 cm)

FF-FSR80-JA



Chrome Multi Purpose Bar

MATERIAL Steel **COLOR** Chrome/Black

FFRG-38LB



38" Rubber Grip Lat Bar

MATERIAL Steel/Rubber **LENGTH** 38"
WEIGHT 13 lbs **COLOR** Chrome/Black

FF-DBG



Dog Bone Grip w/ Strap

MATERIAL Steel **STRAP LENGTH** 12" (30.5 cm)
GRIP DIAMETER 1.25" (3.2 cm) **BALL DIAMETER** 2" (5 cm)
WEIGHT 1.65 lbs (0.75 kg) **COLOR** Black

FFRG-TPDB



23" Rubber Grip Triceps Press Down Bar

MATERIAL Steel/Rubber **LENGTH** 23"
WEIGHT 7 lbs **COLOR** Chrome/Black

FFRG-28RCB



28" Rubber Grip Revolving Curl Bar

MATERIAL Steel/Rubber **LENGTH** 28.7"
WEIGHT 7 lbs **COLOR** Chrome/Black

FFRG-TPB12



12" Rubber Grip Tricep Pressdown Bar

MATERIAL Steel/Rubber **LENGTH** 7" (17.8 cm)
WIDTH 5.1" (13 cm) **HEIGHT** 5.1" (13 cm) **WEIGHT** 5 lbs
COLOR Chrome/Black

FFRG-34PSLB



34" Rubber Grip Pro-Style Lat Bar

MATERIAL Steel/Rubber **LENGTH** 34"
WEIGHT 10 lbs **COLOR** Chrome/Black

FFC-TPB12



Chrome 12" Tricep Pressdown Bar

MATERIAL Steel **LENGTH** 12" (30.5 cm)
WIDTH 3" (7.5 cm) **HEIGHT** 7.9" (20 cm)
WEIGHT 6 lbs (2.7 kg) **COLOR** Chrome

FF-RGMPB



Rubber Grip Multi Purpose Bar

MATERIAL Steel/Rubber **LENGTH** 15" (38 cm)
WIDTH 9.25" (23.5 cm) **HEIGHT** 6" (15.2 cm)
WEIGHT 8 lbs (3.63 kg) **COLOR** Chrome/Black

FF-RGTVB



Rubber Grip Triceps V Bar

MATERIAL Steel/Rubber **LENGTH** 15" (38 cm)
WIDTH 1.5" (3.8 cm) **HEIGHT** 9.25" (23.5 cm)
WEIGHT 5 lbs (2.3 kg) **COLOR** Chrome/Black



FFC-28RCB

Chrome 28" Revolving Curl Bar

MATERIAL Steel **LENGTH** 28" (71 cm) **WIDTH** 3.5" (8.9 cm)
HEIGHT 1.9" (4.8 cm) **WEIGHT** 3 lbs (1.4 kg) **COLOR** Chrome



FFC-14TVBAR

Chrome 14" Tricep V-Bar

MATERIAL Steel **LENGTH** 14.3" (36.5 cm) **COLOR** Chrome
WIDTH 10.2" (26 cm) **WEIGHT** 7.28 lb (3.3 kg)



FF-CSH40

Chrome Revolving Stirrup Handle

MATERIAL Steel **COLOR** Chrome **LENGTH** 5.5" (14 cm)
HEIGHT 5.5" (14 cm) **WEIGHT** 2 lbs (0.9 kg)



FFC-21RSB

Chrome 21" Revolving Straight Bar

MATERIAL Steel **LENGTH** 21" (53.3 cm) **HEIGHT** 1.9" (4.8 cm)
WEIGHT 6 lbs (2.7 kg) **COLOR** Chrome



FFC-12RSB

Chrome 12" Revolving Straight Bar

MATERIAL Steel **LENGTH** 12" (30.5 cm)
WEIGHT Contact Supplier **COLOR** Chrome



FFC-28PSLB

Chrome 28" Pro-Style Lat Bar

MATERIAL Steel **LENGTH** 28" (71 cm) **HEIGHT** 17.2" (43.7 cm)
WEIGHT 4.35 lbs (1.97 kg) **COLOR** Chrome



FFC-48LB-V2

Chrome 48" Lat Bar

MATERIAL Steel **LENGTH** 48" (122 cm) **WIDTH** 4" (10 cm)
HEIGHT 1.9" (4.8 cm) **WEIGHT** 3 lb (1.36 kg) **COLOR** Chrome



FF-ACS

Ankle Cuff / Strap

MATERIAL Steel **LENGTH** 10.2" (26 cm) **WIDTH** 3.2" (8.2 cm)
WEIGHT 0.31 lb (0.14 kg) **COLOR** Black



FFC-SRCB

Chrome Seated Row/Chin Bar

MATERIAL Steel **LENGTH** 7.5" (19 cm) **WIDTH** 6.5" (16.5 cm)
HEIGHT 5.5" (14 cm) **WEIGHT** 5 lbs (2.3 kg) **COLOR** Chrome



FF-STR

Single Triceps Rope

MATERIAL Nylon/Rubber **LENGTH** 15" L (38.1 cm)
WEIGHT 0.9 lb (0.4 kg) **COLOR** Black



FFRG-28PSLB

28" Rubber Grip Pro-Style Lat Bar

MATERIAL Steel/Rubber **LENGTH** 28.7" **WEIGHT** 12 lbs
COLOR Chrome/Black



FF-CSH10

Revolving Chrome Stirrup Handle

MATERIAL Steel **LENGTH** 7.25" (18.4 cm)
HEIGHT 7" (17.8 cm) **WEIGHT** 2.4 lbs (1.07 kg) **COLOR** Chrome



FF-NSH5

Rubber Grip 21" Revolving Straight Bar

MATERIAL Steel/Rubber **LENGTH** 21" **WEIGHT** 4.9 lbs (2.2 kg)
COLOR Chrome/Black



FF-TAS15

Thigh / Ankle Strap

MATERIAL Rubber **LENGTH** 0.8 (2 cm) **WIDTH** 2 (5.1 cm)
HEIGHT 10.2 (25.9 cm) **WEIGHT** 0.2 lb (0.09 kg) **COLOR** Black



FFW-LAS

White Leather Ankle Strap

MATERIAL Leather **LENGTH** 16.5" (42 cm) **WIDTH** 2.4" (6.1 cm)
WEIGHT 0.3 lb (0.15 kg) **COLOR** White



FF-ANH50

Adjustable Nylon Stirrup Handle

MATERIAL Steel/Nylon **LENGTH** 20" (50.8 cm)
WIDTH 1.5" (3.8 cm) **HANDLE HEIGHT** 5.1" (13 cm)
WEIGHT 0.45 lbs (0.2 kg) **COLOR** Black



FF-ACS-WOOL

Ankle Cuff / Strap - Wool Padded

MATERIAL Wool/Nylon Fabric/Steel D-rings
LENGTH 5.5" (14 cm) **WIDTH** 2.95" (7.5 cm) **HEIGHT** 1.96" (5 cm)
WEIGHT 0.31 lb (0.14 kg) **COLOR** Black/White



FF-CHCA

Ab Crunch Harness Cable Attachment

MATERIAL Foam/Steel **LENGTH** 15.4" (39.1 cm)
WIDTH 1.6" (4 cm) **HEIGHT** 16.9" (42.9 cm)
WEIGHT 0.48lb (0.22kg) **COLOR** Black



FF-AAH55

Adjustable Aluminum Stirrup Handle

MATERIAL Steel/Nylon **LENGTH** 20" (50.8 cm)
WIDTH 1.5" (3.8 cm) **HANDLE HEIGHT** 5.1" (13 cm)
WEIGHT 0.45 lbs (0.2 kg) **COLOR** Chrome/Black

FFC-48LB



Chrome 48" Lat Bar

MATERIAL Steel **LENGTH** 49" (122 cm)
WIDTH 1.5" (3.8 cm) **HEIGHT** 9.73" (24.7 cm)
WEIGHT 5.12 lbs (2.3 kg)
COLOR Chrome/Black

FF-NSH15



Revolving Neoprene Stirrup Handle

MATERIAL Steel/Rubber
LENGTH 5.9" (15 cm) **WIDTH** 5.7" (14.5 cm)
WEIGHT 1.6 lbs (0.7 kg)
COLOR Chrome/Black

FFRG-38PSLB



38" Rubber Grip Pro-Style Lat Bar

MATERIAL Steel/Rubber
LENGTH 37.5" (95.2 cm)
WIDTH 5.5" (13.9 cm) **HEIGHT** 8.5" (21.5 cm)
WEIGHT 13 lbs (5.9 kg)
COLOR Chrome/Black

FF-RGH45



Rubber Grip Revolving Stirrup Handle

MATERIAL Steel/Rubber
LENGTH 5.5" (14 cm) **WIDTH** 4.9" (12.4 cm)
HEIGHT 5.5" (14 cm)
WEIGHT 0.8 lb (0.36 kg)
COLOR Chrome/Black

FFRG-48LB



48" Rubber Grip Lat Bar

MATERIAL Steel/Rubber
LENGTH 48" (122 cm) **WIDTH** 1.5" (3.81 cm)
HEIGHT 7" (17.8 cm) **WEIGHT** 13 lbs (5.9 kg)
COLOR Chrome/Black

FF-RGSRCB



Rubber Grip Seated Row/Chin Bar

MATERIAL Steel/Rubber
LENGTH 7" (18 cm) **WIDTH** 5.1" (13 cm)
HEIGHT 5.1" (13 cm) **WEIGHT** 4 lbs (1.8 kg)
COLOR Chrome/Black

FFC-42SB



Chrome 42" Dual Hook Straight Bar Cable Attachment

MATERIAL Steel

LENGTH 42" (106.7 cm) **WIDTH** 1.5" (3.8 cm)

HEIGHT 1.5" (3.8 cm)

WEIGHT 10.9 lbs (5 kg) **COLOR** Chrome

FF-NTR2



Nylon Tricep Rope

MATERIAL Rubber/Steel

LENGTH 30" (76.2 cm)

WIDTH 2.25" (5.7 cm)

HEIGHT 2.25" (5.7 cm)

WEIGHT 0.8 lbs (0.36 kg) **COLOR** Black

FF-MGLPD



Multi Grip Lat Pulldown Bar Attachment

MATERIAL Steel **LENGTH** 48" (122 cm)

WIDTH 7" (17.8 cm)

HEIGHT 10.14" (25.75 cm)

WEIGHT 19.8 lbs (9 kg) **COLOR** Black

FF-10TSNCA



10" Tricep Strap Nylon Cable Attachment

MATERIAL Nylon

LENGTH 10"

WEIGHT 0.31 lbs (0.14 kg)

COLOR Black

FF-NSH5



Nylon Strap Handle - Set of 2

MATERIAL Nylon/Polyurethane

LENGTH 6" (15.2 cm) **WIDTH** 4.8" (12.2 cm)

HEIGHT 1.54" (3.8 cm)

WEIGHT 0.11 lbs (0.05 kg) **COLOR** Black

FF-WDWPRI-80



3" Weightlifting Deadlift Wood Platform w/ Rack Insert

MATERIAL:
Platform Tube Frame: 11 Gauge Steel, 1" Black Vulcanized Rubber Sheet, 2" Bamboo Board , 2" Foam Mat

WEIGHT:
1500 lb (680 kg)

THICKNESS:
3.15" (8 cm)

FOOT PRINT:
107.6"L × 95"W (273.4 cm × 238.7 cm)

DIMENSIONS - OVERALL:
107.6"L × 95"W × 3.15"H (273.4 cm × 238.7 cm × 8 cm)

DIMENSIONS - OTHER:
Bamboo Wooden Board: 101.3"L × 35"W (257.4 cm × 89.0 cm)
Center Platform: 60"L × 41.3"W (152.4 cm × 105.0 cm)
Rack Insert: 47.6"L × 41.3"W (121.0 cm × 105.0 cm)
Drop Zone: 53.7"L × 26.3"W (136.4 cm × 66.85 cm) each side

FF-WDP20



Weightlifting Deadlift Platform

MATERIAL:
6 strong impact rubber mats, 1 bamboo board, and a stable powder-coated metal frame

WEIGHT:
310.8 lb (141 kg)

THICKNESS:
2" (5 cm)

FOOT PRINT:
71"L × 94"W (180.34 cm × 238.76 cm)

DIMENSIONS - OVERALL:
71"L × 94"W × 2"H(180.34 cm × 238.76 cm × 5 cm)

DIMENSIONS - OTHER:
Wooden Board: 39.5" × 71" x 1" (100 cm × 180 cm × 3 cm)
Mat: Six (6) 24" × 24" × 1.2" (60 cm × 60 cm × 3 cm)

FRENCH FITNESS

06

PLATE LOADED

FFB-45DLLP FFS-45DLLP



45 Degree Linear Leg Press

PAINT COLOR:
Black/Silver

STEEL TUBE SIZE:
65 mm × 114 mm × 3 mm

LENGTH:
98"(249 cm)

VINYL COLOR:
Black

WEIGHT:
38.14 lbs (17.3 kg)

WIDTH:
61" (155 cm)

MATERIAL:
11 Gauge Steel, PU Leather, Foam, Rubber handles

WEIGHT LOADING CAPACITY:
1000 lbs (454 kg)

HEIGHT:
61" (155 cm)

FFM-PLHLP FFN-PLHLP



Iso-Lateral Horizontal Leg Press Plate Loaded

PAINT COLOR:
Black/Silver

STEEL TUBE SIZE:
50 mm × 80 mm × 3 mm

LENGTH:
70" (178 cm)

VINYL COLOR:
Black

WEIGHT:
605 lbs (275 kg)

WIDTH:
59.5" (152 cm)

MATERIAL:
11 Gauge Steel, PU Leather, Foam, Rubber handles

WEIGHT LOADING CAPACITY:
900 lbs (408.2 kg)

HEIGHT:
60" (153 cm)

FFM-CLPS



Monster Compact Leg Press Sled

PAINT COLOR:
Black

VINYL COLOR:
Black

MATERIAL:
Steel, PU Leather, Foam, Rubber handles

LENGTH:
77.5" (197 cm)

WIDTH:
51.3" (130.5 cm)

HEIGHT:
56.1" (142.5 cm)

WEIGHT:
245 lbs (111 kg)

WEIGHT LOADING CAPACITY:
617.29 lbs (280 kg)

FFB-PSLP



Black Pendulum Squat Leg Press Machine

PAINT COLOR:
Black

VINYL COLOR:
Black

MATERIAL:
14 Gauge Steel, PU Leather, Foam, Rubber handles

STEEL TUBE SIZE:
75 mm × 75 mm × 2 mm

WEIGHT:
280 lbs (127 kg)

WEIGHT LOADING CAPACITY:
330 lbs (150kg)

LENGTH:
75.8" (192.7 cm)

WIDTH:
46.2" (117.4 cm)

HEIGHT:
61.2" (155.6 cm)

FFM-VLP FFN-VLP



Vertical Leg Press Plate Loaded

PAINT COLOR:
Black/Silver

VINYL COLOR:
Black

MATERIAL:
11 Gauge Steel

STEEL TUBE SIZE:
3 mm

WEIGHT:
273 lbs (124kg)

WEIGHT LOADING CAPACITY:
770 lbs (350 kg)

LENGTH:
50.2" (127.5 cm)

WIDTH:
67.5" (171.5 cm)

HEIGHT:
71.7" (182.1 cm)

FFB-LSC



Black Leverage Squat & Calf Machine

PAINT COLOR: Black

VINYL COLOR: Black

MATERIAL: 11 Gauge Steel, PU Leather, Foam, Rubber handles,

STEEL TUBE SIZE: 75 mm × 75 mm × 3 mm

WEIGHT: 165 lbs (75 kg)

WEIGHT LOADING CAPACITY: 660 lbs (300 kg)

LENGTH: 61" (153.9 cm)

WIDTH: 46" (117.4 cm)

HEIGHT: 57" (143.7 cm)



FFM-ASP FFN-ASP

Angled Squat Press Plate Loaded

MATERIAL 12 Gauge Steel, PU Leather, Foam, Rubber handles

PAINT COLOR Black/Silver

VINYL COLOR Black

STEEL TUBE SIZE 50 mm × 100 mm × 2.5 mm

WEIGHT LOADING CAPACITY 660 lbs (300 kg)

LENGTH 76" (193 cm) **WIDTH** 57" (144.8 cm)

HEIGHT 56.5" (143.5 cm) **WEIGHT** 474 lbs (215kg)



FF-BSM20

Belt Squat Machine

MATERIAL 11 Gauge Steel, PU Leather, Foam, Rubber handles

PAINT COLOR Black **VINYL COLOR** Black

STEEL TUBE SIZE 50 mm × 75 mm × 3 mm

WEIGHT LOADING CAPACITY 440 lbs (200 kg)

LENGTH 75.7" (192.3 cm) **WIDTH** 48.3" (122.7 cm)

HEIGHT 42.9" (109 cm) **WEIGHT** 291 lbs (132kg)

FF-PS50



Pit Shark Belt Squat Machine

MATERIAL:
12 Gauge Steel

STEEL TUBE SIZE:
2.5 mm (Thickness)

LENGTH:
64.1" (163 cm)

PAINT COLOR:
Black

WEIGHT:
339.5lbs (154kg)

WIDTH:
70.8" (180 cm)

VINYL COLOR:
Black

WEIGHT LOADING CAPACITY:
661lbs (300kg)

HEIGHT:
60.6" (154 cm)



FFB-LHS FFS-LHS

Linear Hack Squat

MATERIAL 11 Gauge Steel, PU Leather, Rubber handles

PAINT COLOR Black/Silver

VINYL COLOR Black

STEEL TUBE SIZE 50 mm × 80 mm × 3 mm

LENGTH 81" (204 cm) **WIDTH** 63" (158 cm)

HEIGHT 50" (125 cm) **WEIGHT** 452 lbs (205 kg)



FF-PLBSTP

Belt Squat Training Platform Plate Loaded

MATERIAL 11 Gauge Steel, PU Leather, Rubber handles

PAINT COLOR Black

VINYL COLOR Black **STEEL TUBE SIZE** 75 mm × 75 mm × 3 mm

WEIGHT LOADING CAPACITY 881.85 lbs (400 kg)

LENGTH 67.25" (170.82 cm) **WIDTH** 47.5" (120.65 cm)

HEIGHT 68.12" (173.02 cm) **WEIGHT** 254 lbs (115 kg)

FFA-PLPPS FFP-PLPPS



Plate Loaded Pro Power Squat

MATERIAL 11 Gauge Steel, PU Leather, Foam, Rubber handles

PAINT COLOR Black/Silver

VINYL COLOR Black

STEEL TUBE SIZE 50 mm × 80 mm × 3 mm

LENGTH 57" (145 cm) **WIDTH** 57.8" (147 cm)

HEIGHT 70.8" (180 cm) **WEIGHT** 491 lbs (223 kg)

FFM-PLSL FFN-PLSL



Squat Lunge Plate Loaded

MATERIAL 11 Gauge Steel

PAINT COLOR Black/Silver

VINYL COLOR Black

STEEL TUBE SIZE 50 mm × 80 mm × 3 mm

LENGTH 64" (162.3 cm) **WIDTH** 67" (169.1 cm)

HEIGHT 35" (872 cm) **WEIGHT** 269 lbs (122kg)

FFB-PLSVS FFS-PLSVS



Super V-Squat Plate Loaded

MATERIAL 11 Gauge Steel, PU Leather, Foam, Rubber handles

PAINT COLOR Black/Silver **VINYL COLOR** Black

WEIGHT 432 lbs (196 kg) **STEEL TUBE SIZE** 50 mm × 100 mm × 3 mm

WEIGHT LOADING CAPACITY 1000 lbs (450 kg)

LENGTH 77.75" (197.5 cm) **WIDTH** 64.25" (163.2 cm)

HEIGHT 68.8" (174.8 cm)

FFM-ILPLC FFN-ILPLC



Iso-Lateral Prone Leg Curl Plate Loaded

PAINT COLOR:
Black/Silver

LENGTH:
61" (155 cm)

STEEL TUBE SIZE:
50 mm × 80 mm × 3 mm

VINYL COLOR:
Black

WIDTH:
51" (130 cm)

WEIGHT:
282 lbs (128kg)

MATERIAL:
11 Gauge Steel, PU Leather, Foam, Rubber handles

HEIGHT:
32" (80 cm)

FFT-PLILKLC FFD-PLILKLC



Iso Lateral Kneeling Leg Curl Plate Loaded

PAINT COLOR:
Black/Silver

LENGTH:
49" (125 cm)

STEEL TUBE SIZE:
50 mm × 100 mm × 3 mm

VINYL COLOR:
Black

WIDTH:
59" (150 cm)

WEIGHT:
311 lbs (142 kg)

MATERIAL:
11 Gauge Steel, PU Leather, Foam, Rubber handles

HEIGHT:
51" (130 cm)

FFM-PLKLC FFN-PLKLC



Iso-Lateral Kneeling / Standing Leg Curl Plate Loaded

PAINT COLOR:
Black/Silver

VINYL COLOR:
Black

MATERIAL:
11 Gauge Steel, PU Leather, Foam, Rubber handles

STEEL TUBE SIZE:
50 mm × 80 mm × 3 mm

WEIGHT:
297 lbs (135 kg)

WEIGHT LOADING CAPACITY:
400 lbs (181 kg)

LENGTH:
43" (109 cm)

WIDTH:
54" (137 cm)

HEIGHT:
47" (119 cm)

FFM-PLSLC FFN-PLSLC



Seated Leg Curl Plate Loaded

PAINT COLOR:
Black/Silver

VINYL COLOR:
Black

MATERIAL:
11 Gauge Steel, PU Leather, Foam, Rubber handles

LENGTH:
52" (135 cm)

WIDTH:
55" (138 cm)

HEIGHT:
50" (125 cm)

STEEL TUBE SIZE:
50 mm × 80 mm × 3 mm

WEIGHT:
363 lbs (165 kg)

FFM-PLHAA FFN-PLHAA



Hip Abductor / Adductor Plate Loaded

PAINT COLOR:
Black/Silver

VINYL COLOR:
Black

MATERIAL:
12 Gauge Steel, PU Leather, Foam, Rubber handles

LENGTH:
63" (160 cm)

WIDTH:
51.2" (130 cm)

HEIGHT:
51.8" (131.5 cm)

STEEL TUBE SIZE:
50 mm × 100 mm × 2.5 mm

WEIGHT:
220 lbs (100 kg)

FFM-RKG FFN-RKG



Rear Kick Back Glute

PAINT COLOR:
Black/Silver

VINYL COLOR:
Black

MATERIAL:
11 Gauge Steel, PU Leather, Foam, Rubber handles

LENGTH:
43.9" (111.5 cm)

WIDTH:
56.3" (143 cm)

HEIGHT:
64.5" (164 cm)

STEEL TUBE SIZE:
75 mm × 75 mm × 3 mm

WEIGHT:
385 lbs (175 kg)

FFT-PLILLE FFD-PLILLE



Iso Lateral Leg Extension Plate Loaded

PAINT COLOR:
Black/Silver

VINYL COLOR:
Black

MATERIAL:
11 Gauge Steel, PU Leather, Foam, Rubber handles

STEEL TUBE SIZE:
50 mm × 100 mm × 3 mm

WEIGHT:
277 lbs (126 kg)

WEIGHT LOADING CAPACITY:
360 lbs (163.3 kg)

LENGTH:
54" (137 cm)

WIDTH:
61" (155 cm)

HEIGHT:
44.5" (113 cm)

FFM-PLLE FFN-PLLE



Iso-Lateral Leg Extension Plate Loaded

PAINT COLOR:
Black/Silver

VINYL COLOR:
Black

MATERIAL:
11 Gauge Steel, PU Leather, Foam, Rubber handles

LENGTH:
55" (138 cm)

WIDTH:
57" (145 cm)

HEIGHT:
57" (145 cm)

STEEL TUBE SIZE:
50 mm × 100 mm × 3 mm

WEIGHT:
277 lbs (126 kg)

FFM-PLTDF FFN-PLTDF

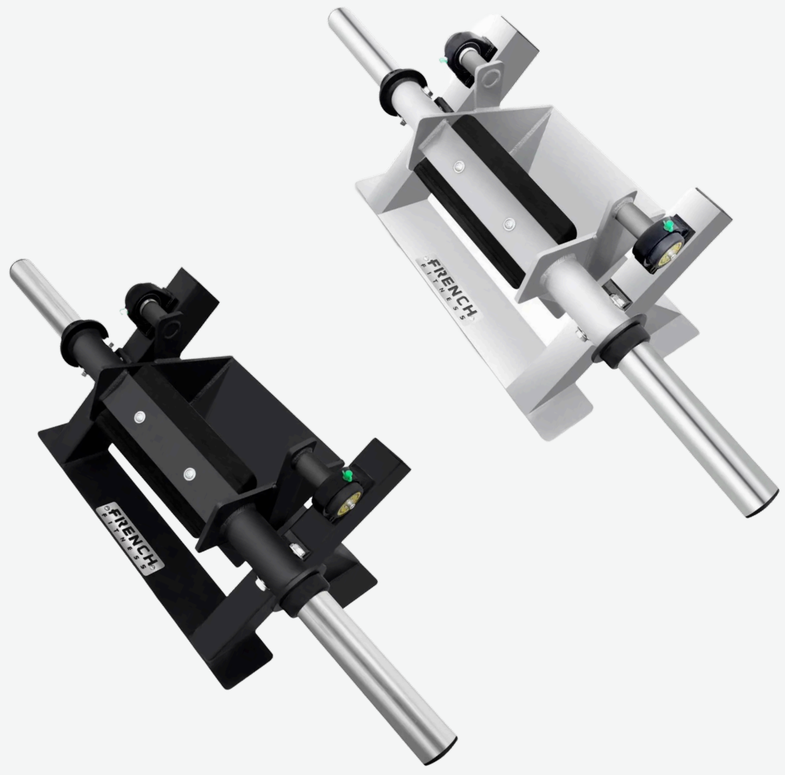

Tibia Dorsi Flexion Plate Loaded

PAINT COLOR:
Black/Silver

VINYL COLOR:
Black

MATERIAL:
11 Gauge Steel

LENGTH:
40.7" (103.4 cm)

WIDTH:
14.7" (37.5 cm)

HEIGHT:
13.1" (33.4 cm)

STEEL TUBE SIZE:
50 mm × 80 mm × 3 mm

WEIGHT:
77 lbs (35 KG)

FFB-PLSCR FFS-PLSCR



Seated Calf Raise Plate Loaded

PAINT COLOR:
Black/Silver

VINYL COLOR:
Black

MATERIAL:
11 Gauge Steel, PU Leather, Foam, Rubber handles,

STEEL TUBE SIZE:
60 mm × 100 mm × 3 mm

WEIGHT:
187 lbs (85 kg)

WEIGHT LOADING CAPACITY:
660 lbs (300 kg)

LENGTH:
60.6" (153.9 cm)

WIDTH:
31.6" (80.3 cm)

HEIGHT:
38.9" (98.8 cm)

FFM-PLSHC FFN-PLSHC



Super Horizontal Calf Plate Loaded

PAINT COLOR:
Black/Silver

VINYL COLOR:
Black

MATERIAL:
11 Gauge Steel, PU Leather, Foam, Rubber handles

LENGTH:
64" (163 cm)

WIDTH:
57" (145 cm)

HEIGHT:
60" (152 cm)

STEEL TUBE SIZE:
60 mm × 100 mm × 3 mm

WEIGHT:
380 lbs (173 kg)

FFM-PLSLCE FFN-PLSLCE



Seated Leg Curl & Extension Plate Loaded

PAINT COLOR:
Black/Silver

VINYL COLOR:
Black

MATERIAL:
14 Gauge Steel, PU Leather, Foam, Rubber handles

STEEL TUBE SIZE:
50 mm × 50 mm × 2 mm

WEIGHT:
110 lbs (50 kgs)

WEIGHT LOADING CAPACITY:
881.84 lbs (400 kg)

LENGTH:
64.6" (164 cm)

WIDTH:
39.4" (100 cm)

HEIGHT:
32.7" (83 cm)

FF-TBR40



TBR40 Plate Loaded T-Bar Row

MATERIAL:
Steel

PAINT COLOR:
Black

VINYL COLOR:
Black

STEEL TUBE SIZE:
50 mm × 70 mm × 2 mm

WEIGHT:
85.3 lbs (38.7 kg)

WEIGHT LOADING CAPACITY:
660 lbs (500 kgs)

LENGTH:
76.3" (194 cm)

WIDTH:
30.3" (77 cm)

HEIGHT:
16.9"-22.8"
(43~58 cm)



FF-CSTBR

Chest Supported T-Bar Row

MATERIAL Steel **PAINT COLOR** Black
VINYL COLOR Black
STEEL TUBE SIZE 40 mm × 80 mm × 2 mm
WEIGHT LOADING CAPACITY 440.93 lbs (200 kg)
LENGTH 67.5" (171.45 cm)
WIDTH 32.8" (83.31 cm)
HEIGHT 45.5" (115.57 cm)
WEIGHT 105.82 lbs (48 kgs)





FF-TBAR-C90

Chest Supported T-Bar Row Black

MATERIAL Steel **PAINT COLOR** Black/Silver
VINYL COLOR Black
STEEL TUBE SIZE 50 mm × 75 mm × 3 mm
WEIGHT LOADING CAPACITY 220 lbs (100 kg)
LENGTH 70.4" (179 cm)
WIDTH 37.4" (95 cm)
HEIGHT 46.4" (118 cm)
WEIGHT 240 lb (109 kg)

FF-TBR80



TBR80 Plate Loaded T-Bar Row

MATERIAL:
Steel

LENGTH:
82.8" (210.3 cm)

WEIGHT:
202 lbs (91.6 kg)

PAINT COLOR:
Red/Silver

WIDTH:
32.4" (82.3 cm)

VINYL COLOR:
Black

HEIGHT:
20.7" (52.6 cm)

FFM-CT FFN-CT



Combo Twist Plate Loaded

PAINT COLOR:
Black/Silver

LENGTH:
58" (148 cm)

STEEL TUBE SIZE:
50 mm × 80 mm × 3 mm

VINYL COLOR:
Black

WIDTH:
58" (148 cm)

WEIGHT:
364 lbs (165 kg)

MATERIAL:
Steel, PU Leather, Rubber handles

HEIGHT:
55" (140 cm)

FFM-GBJ FFN-GBJ



Ground Base Jammer Plate Loaded

PAINT COLOR:
Black/Silver

LENGTH:
83" (209.2 cm)

STEEL TUBE SIZE:
50 mm × 80 mm × 3 mm

VINYL COLOR:
Black

WIDTH:
71" (179.1 cm)

WEIGHT:
313 lbs (142kg)

MATERIAL:
Steel, PU Leather, Rubber handles

HEIGHT:
89" (225.2 cm)

FFM-ILSIP FFN-ILSIP



Iso-Lateral Super Incline Press Plate Loaded

PAINT COLOR:
Black/Silver

VINYL COLOR:
Black

MATERIAL:
Steel, PU Leather, Foam, Rubber handles

LENGTH:
59" (150 cm)

WIDTH:
53" (135 cm)

HEIGHT:
65" (165 cm)

STEEL TUBE SIZE:
50 mm × 80 mm × 3 mm

WEIGHT:
302 lbs (137 kg)

FFB-LHBP FFS-LHBP



Leverage Horizontal Bench Press Plate Loaded

PAINT COLOR:
Black/Silver

VINYL COLOR:
Black

MATERIAL:
Steel, PU Leather, Foam, Rubber handles

STEEL TUBE SIZE:
50 mm × 80 mm × 3 mm

WEIGHT:
220 lbs (100 kg)

WEIGHT LOADING CAPACITY:
550 lbs (250kg Total)

LENGTH:
67.5" (171.5 cm)

WIDTH:
67.3" (171 cm)

HEIGHT:
42.2" (107.2 cm)

FFT-PLCP FFD-PLCP



Chest Press Plate Loaded

PAINT COLOR:
Black/Silver

VINYL COLOR:
Black

MATERIAL:
Steel, PU Leather, Foam, Rubber handles

LENGTH:
43" (110 cm)

WIDTH:
67" (169.5 cm)

HEIGHT:
70" (177.5 cm)

WEIGHT:
353 lb (160 kg)

WEIGHT LOADING CAPACITY:
450 lb (204 kg)

FFM-PLDCP FFD-PLDCP



Iso-Lateral Decline Chest Press Plate Loaded

PAINT COLOR:
Black/Silver

VINYL COLOR:
Black

MATERIAL:
Steel, PU Leather, Foam, Rubber handles

LENGTH:
52" (130 cm)

WIDTH:
55" (138 cm)

HEIGHT:
69" (173 cm)

STEEL TUBE SIZE:
50 mm × 80 mm × 3 mm

WEIGHT:
310 lbs (141 kg)

FFM-PLFCBP FFN-PLFCBP



Iso-Lateral Flat Chest Bench Press Plate Loaded

PAINT COLOR:
Black/Silver

STEEL TUBE SIZE:
50 mm × 80 mm × 3 mm

LENGTH:
48" (122 cm)

VINYL COLOR:
Black

WEIGHT:
308 lbs (140 kg)

WIDTH:
67" (170 cm)

MATERIAL:
Steel, PU Leather, Foam, Rubber handles

WEIGHT LOADING CAPACITY:
550 lbs (250 kg)

HEIGHT:
72" (183 cm)

FFM-PLICP FFD-PLICP



Chest Press Plate Loaded

PAINT COLOR:
Black/Silver

LENGTH:
40" (100 cm)

STEEL TUBE SIZE:
50 mm × 80 mm × 3 mm

VINYL COLOR:
Black

WIDTH:
53" (133 cm)

WEIGHT:
306 lbs (139 kg)

MATERIAL:
Steel, PU Leather, Foam, Rubber handles

HEIGHT:
76" (191 cm)

FFT-PLICP FFN-PLICP



Incline Chest Press Plate Loaded

PAINT COLOR:
Black/Silver

VINYL COLOR:
Black

MATERIAL:
Steel, PU Leather, Foam, Rubber handles

LENGTH:
55.7" (128 cm)

WIDTH:
62" (158 cm)

HEIGHT:
74.2" (192 cm)

STEEL TUBE SIZE:
50 mm × 100 mm × 3 mm

WEIGHT:
297 lb (135 kg)

FFM-PLP FFN-PLP



Pullover Plate Loaded

PAINT COLOR:
Black/Silver

VINYL COLOR:
Black

MATERIAL:
Steel, PU Leather, Foam, Rubber handles

LENGTH:
55" (138 cm)

WIDTH:
52" (130 cm)

HEIGHT:
59" (150 cm)

STEEL TUBE SIZE:
50 mm × 80 mm × 3 mm

WEIGHT:
352 lbs (160 kg)

FFM-PLWC FFN-PLWC



Iso-Lateral Wide Chest Plate Loaded

PAINT COLOR:
Black/Silver

LENGTH:
45" (115 cm)

STEEL TUBE SIZE:
50 mm × 80 mm × 3 mm

VINYL COLOR:
Black

WIDTH:
59" (150 cm)

WEIGHT:
310 lbs (141 kg)

MATERIAL:
Steel, PU Leather, Foam, Rubber handles

HEIGHT:
69" (176 cm)

FFT-PLDCP FFD-PLDCP



Decline Chest Press Plate Loaded

PAINT COLOR:
Black/Silver

STEEL TUBE SIZE:
50 mm × 100 mm × 3 mm

LENGTH:
72" (182.9 cm)

VINYL COLOR:
Black

WEIGHT:
271 lbs (123 kg)

WIDTH:
57" (144.8 cm)

MATERIAL:
Steel, PU Leather, Foam, Rubber handles

WEIGHT LOADING CAPACITY:
5-45 lb (4-25 kg) plates per weight rod

HEIGHT:
77.75" (197.6 cm)



FFM-PCB

Marin Seated Bicep Curl Plate Loaded

MATERIAL 11 Gauge Steel, PU Leather, Foam, Rubber handles

PAINT COLOR Black **VINYL COLOR** Black

STEEL TUBE SIZE 50 mm × 80 mm × 3 mm

LENGTH 44" (112 cm) **WIDTH** 46" (117 cm)

HEIGHT 55" (140 cm) **WEIGHT** 225 lbs (100 kg)



FFN-PCB

Napa Seated Bicep Curl Plate Loaded

MATERIAL 11 Gauge Steel, PU Leather, Foam, Rubber handles

PAINT COLOR Silver **VINYL COLOR** Black

STEEL TUBE SIZE 50 mm × 80 mm × 3 mm

LENGTH 44" (112 cm) **WIDTH** 46" (117 cm)

HEIGHT 55" (140 cm) **WEIGHT** 225 lbs (100 kg)



FFT-PLBAC

Tahoe Biceps Arm Curl Plate Loaded

MATERIAL 11 Gauge Steel, PU Leather, Foam, Rubber handles

PAINT COLOR Black **VINYL COLOR** Black

STEEL TUBE SIZE 50 mm × 100 mm × 3 mm

LENGTH 43" (10 cm) **WIDTH** 56" (141 cm)

HEIGHT 47" (119 cm) **WEIGHT** 274 lbs (125 kg)



FFD-PLBAC

Diablo Biceps Arm Curl Plate Loaded

MATERIAL 11 Gauge Steel, PU Leather, Foam, Rubber handles

PAINT COLOR Silver **VINYL COLOR** Black

STEEL TUBE SIZE 50 mm × 100 mm × 3 mm

LENGTH 43" (10 cm) **WIDTH** 56" (141 cm)

HEIGHT 47" (119 cm) **WEIGHT** 274 lbs (125 kg)

FFT-PLSTDP-V2



Tahoe V2 Seated Tricep Dip / Press Plate Loaded

PAINT COLOR:
Black

VINYL COLOR:
Black

MATERIAL:
Steel, PU Leather, Foam, Rubber handles

STEEL TUBE SIZE:
50 mm × 100 mm × 3 mm

WEIGHT:
276 lb (126 kg)

LENGTH:
69" (175.3 cm)

WIDTH:
52.5" (133.4 cm)

HEIGHT:
37" (94 cm)

FFD-PLSTDP



Diablo Seated Tricep Dip / Press Plate Loaded

PAINT COLOR:
Silver

VINYL COLOR:
Black

MATERIAL:
Steel, PU Leather, Foam, Rubber handles

STEEL TUBE SIZE:
50 mm × 100 mm × 3 mm

WEIGHT LOADING CAPACITY:
440 lbs (200 kg)

LENGTH:
69" (175.3 cm)

WIDTH:
52.5" (133.4 cm)

HEIGHT:
37" (94 cm)

WEIGHT:
276 lb (126 kg)

FFM-PLSTP



Marin Seated Dip / Tricep Press Plate Loaded

PAINT COLOR:
Black

VINYL COLOR:
Black

MATERIAL:
11 Gauge Steel, PU Leather, Foam, Rubber handles

STEEL TUBE SIZE:
40 mm × 80 mm × 3 mm

WEIGHT:
320 lbs (145 kg)

LENGTH:
67" (171 cm)

WIDTH:
38" (97 cm)

HEIGHT:
42" (107 cm)

FFN-PLSTP



Napa Seated Dip / Tricep Press Plate Loaded

PAINT COLOR:
Silver

VINYL COLOR:
Black

MATERIAL:
11 Gauge Steel, PU Leather, Foam, Rubber handles

STEEL TUBE SIZE:
40 mm × 80 mm × 3 mm

LENGTH:
67" (171 cm)

WIDTH:
38" (97 cm)

HEIGHT:
42" (107 cm)

WEIGHT:
320 lbs (145 kg)

FFM-PLWCM



Marin Wrist Curl Machine Plate Loaded

PAINT COLOR:
Black

VINYL COLOR:
Black

MATERIAL:
11 Gauge Steel, PU Leather, Foam, Rubber handles

STEEL TUBE SIZE:
50 mm × 80 mm × 3 mm

LENGTH:
49" (124.6 cm)

WIDTH:
24.3" (61.9 cm)

HEIGHT:
16.7" (42.6 cm)

WEIGHT:
88 lbs (40 kg)

FFN-PLWCM



Napa Wrist Curl Machine Plate Loaded

PAINT COLOR:
Silver

VINYL COLOR:
Black

MATERIAL:
11 Gauge Steel, PU Leather, Foam, Rubber handles

STEEL TUBE SIZE:
50 mm × 80 mm × 3 mm

LENGTH:
49" (124.6 cm)

WIDTH:
24.3" (61.9 cm)

HEIGHT:
16.7" (42.6 cm)

WEIGHT:
88 lbs (40 kg)

FFM-PL4WN



Marin 4-Way Neck Plate Loaded

MATERIAL Steel, PU Leather, Foam, Rubber handles

PAINT COLOR Black **VINYL COLOR** Black

STEEL TUBE SIZE 50 mm × 80 mm × 3 mm

LENGTH 75.27" (191.2 cm)

WIDTH 36.92" (93.8 cm)

HEIGHT 63.5" (161.3 cm)

WEIGHT 396 lbs (180 KG)

FFN-PL4WN



Napa Iso-Lateral Chest/Back Combo Plate Loaded

MATERIAL Steel, PU Leather, Foam, Rubber handles

PAINT COLOR Silver **VINYL COLOR** Black

STEEL TUBE SIZE 50 mm × 80 mm × 3 mm

LENGTH 42" (105 cm) **WIDTH** 60" (150.6 cm)

HEIGHT 52" (130 cm) **WEIGHT** 224 lb (102kg)

FFM-PLLR



Marin Lateral Raise Plate Loaded

MATERIAL Steel, PU Leather, Foam, Rubber handles

PAINT COLOR Black **VINYL COLOR** Black

STEEL TUBE SIZE 50 mm × 80 mm × 3 mm

LENGTH 42" (105 cm) **WIDTH** 60" (150.6 cm)

HEIGHT 52" (130 cm) **WEIGHT** 224 lb (102kg)

FFN-PLLR



Napa Lateral Raise Plate Loaded

MATERIAL Steel, PU Leather, Foam, Rubber handles

PAINT COLOR Silver **VINYL COLOR** Black

STEEL TUBE SIZE 50 mm × 80 mm × 3 mm

LENGTH 42" (105 cm) **WIDTH** 60" (150.6 cm)

HEIGHT 52" (130 cm) **WEIGHT** 224 lb (102kg)

FFT-PLSOP



Tahoe Shoulder-Overhead Press Plate Loaded

MATERIAL Steel, PU Leather, Foam, Rubber handles

PAINT COLOR Black **VINYL COLOR** Black

STEEL TUBE SIZE 50 mm × 100 mm × 3 mm

LENGTH 61" (155 cm) **WIDTH** 66" (167 cm)

HEIGHT 53" (134 cm) **WEIGHT** 280 lb (127 kg)

FFD-PLSOP



Diablo Shoulder-Overhead Press Plate Loaded

MATERIAL Steel, PU Leather, Foam, Rubber handles

PAINT COLOR Silver **VINYL COLOR** Black

STEEL TUBE SIZE 50 mm × 100 mm × 3 mm

LENGTH 61" (155 cm) **WIDTH** 66" (167 cm)

HEIGHT 53" (134 cm) **WEIGHT** 280 lb (127 kg)

FFM-PLSP



Marin Iso-Lateral Shoulder Press Plate Loaded

MATERIAL Steel, PU Leather, Foam, Rubber handles

PAINT COLOR Black **VINYL COLOR** Black

STEEL TUBE SIZE 50 mm × 80 mm × 3 mm

LENGTH 54.1" (137.9 cm) **WIDTH** 72.2" (183.3 cm)

HEIGHT 74.3" (188.8 cm)

WEIGHT 306 lb (139 kg)

FFN-PLSP



Napa Iso-Lateral Shoulder Press Plate Loaded

MATERIAL Steel, PU Leather, Foam, Rubber handles

PAINT COLOR Silver **VINYL COLOR** Black

STEEL TUBE SIZE 50 mm × 80 mm × 3 mm

LENGTH 54.2" (137.9 cm) **WIDTH** 72.2" (183.3 cm)

HEIGHT 74.3" (188.8 cm)

WEIGHT 306 lb (139 kg)

FFM-PLAOC



Marin Abdominal Oblique Crunch Plate Loaded

PAINT COLOR:
Black

VINYL COLOR:
Black

MATERIAL:
11 Gauge Steel, PU Leather, Foam, Rubber handles

STEEL TUBE SIZE:
50 mm × 80 mm × 3 mm

WEIGHT LOADING CAPACITY:
742.9 lbs (337 kg)

LENGTH:
47" (119 cm)

WIDTH:
59" (150 cm)

HEIGHT:
67" (168 cm)

WEIGHT:
305 lbs (138 kg)

FFN-PLAOC



Napa Abdominal Oblique Crunch Plate Loaded

PAINT COLOR:
Silver

VINYL COLOR:
Black

MATERIAL:
11 Gauge Steel, PU Leather, Foam, Rubber handles

STEEL TUBE SIZE:
50 mm × 80 mm × 3 mm

WEIGHT LOADING CAPACITY:
742.9 lbs (337 kg)

LENGTH:
47" (119 cm)

WIDTH:
59" (150 cm)

HEIGHT:
67" (168 cm)

WEIGHT:
305 lbs (138 kg)

FFM-PLDYR



Marin Iso-Lateral D.Y. Row Plate Loaded

MATERIAL Steel, PU Leather, Foam, Rubber handles

PAINT COLOR Black **VINYL COLOR** Black

STEEL TUBE SIZE 50 mm × 100 mm × 3 mm

LENGTH 56" (142 cm) **WIDTH** 61" (155 cm)

HEIGHT 80" (203 cm) **WEIGHT** 297 lb (135 kg)

WEIGHT LOADING CAPACITY 550 lbs (250 kg)

FFN-PLDYR



Napa Iso-Lateral D.Y. Row Plate Loaded

MATERIAL Steel, PU Leather, Foam, Rubber handles

PAINT COLOR Silver **VINYL COLOR** Black

STEEL TUBE SIZE 50 mm × 100 mm × 3 mm

LENGTH 56" (142 cm) **WIDTH** 61" (155 cm)

HEIGHT 80" (203 cm) **WEIGHT** 297 lb (135 kg)

WEIGHT LOADING CAPACITY 550 lbs (250 kg)

FFM-PLILHR



Marin Iso-Lateral High Row Plate Loaded

MATERIAL Steel, PU Leather, Foam, Rubber handles

PAINT COLOR Black **VINYL COLOR** Black

STEEL TUBE SIZE 50 mm × 80 mm × 3 mm

LENGTH 73" (183.7 cm) **WIDTH** 64" (161.9 cm)

HEIGHT 79" (200.9 cm)

WEIGHT 328.4 lb (149 kg)

FFN-PLILHR



Napa Iso-Lateral High Row Plate Loaded

MATERIAL Steel, PU Leather, Foam, Rubber handles

PAINT COLOR Silver **VINYL COLOR** Black

STEEL TUBE SIZE 50 mm × 80 mm × 3 mm

LENGTH 73" (183.7 cm) **WIDTH** 64" (161.9 cm)

HEIGHT 79" (200.9 cm)

WEIGHT 328.4 lb (149 kg)

FFM-PLR



Marin Iso-Lateral Rowing Low Row Plate Loaded

MATERIAL Steel, PU Leather, Foam, Rubber handles

PAINT COLOR Black **VINYL COLOR** Black

STEEL TUBE SIZE 50 mm × 80 mm × 3 mm

LENGTH 59" (150 cm) **WIDTH** 50" (127 cm)

HEIGHT 52" (130 cm) **WEIGHT** 282 lb (128 kg)

FFN-PLR



Napa Iso-Lateral High Row Plate Loaded

MATERIAL Steel, PU Leather, Foam, Rubber handles

PAINT COLOR Silver **VINYL COLOR** Black

STEEL TUBE SIZE 50 mm × 80 mm × 3 mm

LENGTH 59" (150 cm) **WIDTH** 50" (127 cm)

HEIGHT 52" (130 cm) **WEIGHT** 282 lb (128 kg)

WEIGHT LOADING CAPACITY 615.09 lbs (279 kg)

FFT-PLSLR



Tahoe Seated Low Row Plate Loaded

MATERIAL Steel, PU Leather, Foam, Rubber handles

PAINT COLOR Black **VINYL COLOR** Black

STEEL TUBE SIZE 50 mm × 100 mm × 3 mm

LENGTH 55" (139 cm) **WIDTH** 57" (145 cm)

HEIGHT 54" (138 cm) **WEIGHT** 294 lb (134 kg)

FFD-PLSLR



Tahoe Seated Low Row Plate Loaded

MATERIAL Steel

PAINT COLOR Black **VINYL COLOR** Black

STEEL TUBE SIZE 50 mm × 100 mm × 3 mm

LENGTH 55" (139 cm) **WIDTH** 57" (145 cm)

HEIGHT 54" (138 cm) **WEIGHT** 294 lb (134 kg)

WEIGHT LOADING CAPACITY ???



FFM-PLFLP

Marin Iso-Lateral Front Lat Pulldown Plate Loaded

MATERIAL Steel, PU Leather, Foam, Rubber handles

PAINT COLOR Black **VINYL COLOR** Black

STEEL TUBE SIZE 50 mm × 80 mm × 3 mm

LENGTH 66" (166 cm) **WIDTH** 42" (105 cm)

HEIGHT 81" (204 cm) **WEIGHT** 320 lbs (145 kg)



FFN-PLFLP

Napa Iso-Lateral Front Lat Pulldown Plate Loaded

MATERIAL Steel, PU Leather, Foam, Rubber handles

PAINT COLOR Silver **VINYL COLOR** Black

STEEL TUBE SIZE 50 mm × 80 mm × 3 mm

LENGTH 66" (166 cm) **WIDTH** 42" (105 cm)

HEIGHT 81" (204 cm) **WEIGHT** 320 lbs (145 kg)



FFD-PLILFP

Diablo Iso Lateral Front Pulldown Plate Loaded

MATERIAL Steel, PU Leather, Foam, Rubber handles

PAINT COLOR Silver **VINYL COLOR** Black

STEEL TUBE SIZE 50 mm × 100 mm × 3 mm

LENGTH 52" (132 cm) **WIDTH** 59.5" (151 cm)

HEIGHT 74.5" (189.2 cm) **WEIGHT** 323 lb (147 kg)



FFD-PLILHR

Diablo Iso Lateral High Row Plate Loaded

MATERIAL Steel, PU Leather, Foam, Rubber handles

PAINT COLOR Silver **VINYL COLOR** Black

STEEL TUBE SIZE 50 mm × 100 mm × 3 mm

LENGTH 74" (186 cm) **WIDTH** 67" (168 cm)

HEIGHT 76" (192 cm) **WEIGHT** 409 lbs (186 kg)

FF-PLLPLR20



Lat Pulldown / Low Row Plate Loaded

PAINT COLOR:
Black

VINYL COLOR:
Black

MATERIAL:
Steel, PU Leather, Foam, Rubber handles

STEEL TUBE SIZE:
40 mm × 50 mm × 2 mm

WEIGHT LOADING CAPACITY:
250 lbs (113.4 kg)

LENGTH:
55.9" (142 cm)

WIDTH:
38" (96.5 cm)

HEIGHT:
86.6" (220 cm)

WEIGHT:
87.3 lbs (39.6 kg)

FFM-PLWP



Marin Iso-Lateral Wide Pulldown Plate Loaded

PAINT COLOR:
Black

VINYL COLOR:
Black

MATERIAL:
Steel, PU Leather, Foam, Rubber handles

STEEL TUBE SIZE:
50 mm × 80 mm × 3 mm

WEIGHT:
315 lbs (143 kg)

LENGTH:
72" (181 cm)

WIDTH:
43" (107 cm)

HEIGHT:
81" (204 cm)

FFN-PLWP



Napa Iso-Lateral Wide Pulldown Plate Loaded

PAINT COLOR:
Silver

VINYL COLOR:
Black

MATERIAL:
Steel, PU Leather, Foam, Rubber handles

STEEL TUBE SIZE:
50 mm × 80 mm × 3 mm

WEIGHT:
315 lbs (143 kg)

LENGTH:
72" (181 cm)

WIDTH:
43" (107 cm)

HEIGHT:
81" (204 cm)

FFM-SSS



Marin Seated/Standing Shrug Plate Loaded

PAINT COLOR:
Black

VINYL COLOR:
Black

MATERIAL:
Steel, PU Leather, Foam, Rubber handles

STEEL TUBE SIZE:
50 mm × 80 mm × 3 mm

WEIGHT LOADING CAPACITY:
742.9 lbs (337 kg)

LENGTH:
69" (175 cm)

WIDTH:
42" (105 cm)

HEIGHT:
42" (105 cm)

WEIGHT:
297 lb (135 kg)

FFN-SSS



Napa Seated/Standing Shrug Plate Loaded

PAINT COLOR:
Silver

VINYL COLOR:
Black

MATERIAL:
Steel, PU Leather, Foam, Rubber handles

STEEL TUBE SIZE:
50 mm × 80 mm × 3 mm

WEIGHT LOADING CAPACITY:
742.9 lbs (337 kg)

LENGTH:
69" (175 cm)

WIDTH:
42" (105 cm)

HEIGHT:
42" (105 cm)

WEIGHT:
297 lb (135 kg)

FF-FSR100

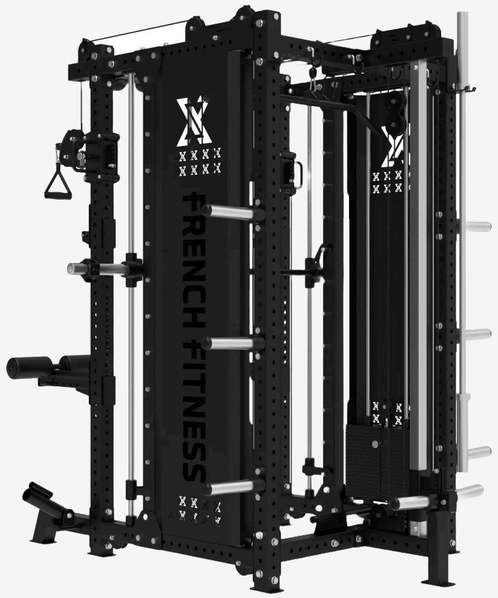

Commercial Functional Smith Rack System

MATERIAL:
11 Gauge Steel

TUBE SIZE:
75mm × 75mm × 3mm

LENGTH:
62.5" (158.7 cm)

WEIGHT:
1113.3lb (505 kg)

WIDTH:
75.0" (190.5 cm)

MAX USER WEIGHT:
350 lbs (159 kg)

HEIGHT:
91.2" (231.6 cm)

COLOR:
Black

WEIGHT STACK:
Standard - 220 lb (99.8 kg) × 2
Optional - 286 lb (129.7 kg) × 2
Optional - 320 lb (145.1 kg) × 2

FF-FSR100-CB



Commercial Cable Smith Rack w/Counter Balance

MATERIAL:
11 Gauge Steel

TUBE SIZE:
75mm × 75mm × 3mm

LENGTH:
66.4" (168.6 cm)

WEIGHT:
1197 lbs (543 kg)

WIDTH:
86.6" (219.9 cm)

MAX USER WEIGHT:
350 lbs (159 kg)

HEIGHT:
91.2" (231.6 cm)

COLOR:
Black

WEIGHT STACK:
Standard - 220 lb (99.8 kg) × 2
Optional - 319 lb (144.7 kg) × 2

FF-FSR70



Dual Cable Smith & Half Rack System

MATERIAL:
Steel

WEIGHT:
935 lb (424 kg)

DEPTH:
70.25" (178.4 cm)

COLOR:
Black, Black/Blue

WIDTH:
83.75" (212.7 cm)

TUBE SIZE:
ASTM A36 Steel 1.6x3.2 in / 1.9x1.9 in (40x80 mm / 50x50 mm)

HEIGHT:
90.2" (229.1 cm)

WEIGHT STACK:
Standard - 220 lb (99.8 kg) × 2
Optional - 286 lb (129.7 kg) × 2

FF-FSR60



Smith, Cable, Squat Rack Gym Machine

MATERIAL:
Steel

DEPTH:
58" (44.5" Depth w/Bar Catches Removed) (147.3 cm)

WIDTH:
83.5" (212.1 cm)

HEIGHT:
88.75" (225.4 cm)

WEIGHT:
800 lb (362.9 kg)

COLOR:
Black, Black/Red, Black/Blue

WEIGHT STACK:
Standard - 220 lb (99.8 kg) × 2
Optional - 286 lb (129.7 kg) × 2

FF-FSR50



Dual Cable & Smith Rack Home Gym

MATERIAL:
Steel

DEPTH:
63.5" (w/Bar Catches) (161.3 cm)

WIDTH:
78.5" W (w/Smith Bar) (199.4 cm)

HEIGHT:
90.75" (230.5cm)

WEIGHT:
920.2 lbs (417.4 kg)

MAX USER WEIGHT:
350 lbs (158.7 kg)

COLOR:
Black/Red

WEIGHT STACK:
Standard - 198 lb (89.8 kg) × 2

FF-FSR20-PL



Multi Functional Gym System Plate Loaded

MATERIAL:
Steel

DEPTH:
63.5" (w/Bar Catches) (161.3cm)

WIDTH:
78.5" W (w/Smith Bar) (199.4cm)

HEIGHT:
90.75" (230.5cm)

WEIGHT:
529.3 lbs (240 kg)

MAX USER WEIGHT:
350 lbs (159 kg)

COLOR:
Black

FF-FSR80



Functional Trainer Smith & Rack Gym System

MATERIAL:
Steel

COLOR:
Black/Red

DEPTH:
56" (142.2 cm)

WEIGHT STACK:
Standard - 220 lb (99.8 kg) × 2

WIDTH:
79" (200.6 cm)

HEIGHT:
85.75" (217.8 cm)

WEIGHT:
992 lbs (450 kg)

FF-FSR90



Functional Trainer Smith & Squat Rack Machine

MATERIAL:
Steel

WEIGHT STACK:
Standard - 220 lb
(99.8 kg) × 2

DEPTH:
65" (65" Depth is w/Bar Catches connected)
(165.1 cm)

WEIGHT:
992 lbs (450 kg)

COLOR:
Black, Black/Yellow

WIDTH:
88 1/8" (223.8 cm)

HEIGHT:
87 3/8" (221.9 cm)

DIMENSIONS:
w/Jammer Arms Fully Extended" 101.5" (Jammer Arms extend 56.5" from Cable Columns)

FF-MSC10



Multi Function Squat Cage Smith

DEPTH:
83" (107 in Depth w/Bench)
(210.8 cm (271.8 cm w/Bench))

WIDTH:
76" (193 cm)

HEIGHT:
88" (223.5 cm)

MATERIAL:
Steel

WEIGHT:
336 lbs (152 kg)

COLOR:
Black/Red

FF-MSC20



Counter Balanced Multi Smith Cable Machine

DEPTH:
62" (need extra for plate)
(157.5 cm)

WIDTH:
87" (220.9 cm)

HEIGHT:
93" (236.2 cm)

MATERIAL:
Steel

WEIGHT:
463 lb (210 kg)

COLOR:
Silver, Black

FFB-ESM



FFB Black Elite Smith Machine

MATERIAL:
Steel

TUBE SIZE:
2.5" × 4.5" flat oval steel tube

LENGTH:
49" (124.4 cm)

WEIGHT:
452 lbs (205 kg)

WIDTH:
87"W (220.9 cm)

COLOR:
Black

HEIGHT:
94" (238.7 cm)

FFS-ESM



Silver Elite Smith Machine

MATERIAL:
Steel

TUBE SIZE:
2.5" × 4.5" flat oval steel tube

LENGTH:
49" (124.4 cm)

WEIGHT:
452 lbs (205 kg)

WIDTH:
87" (220.9 cm)

COLOR:
Silver

HEIGHT:
94" (238.7 cm)

FFM-SM



Marin Smith Machine Plate Loaded

MATERIAL:
11 Gauge Steel

TUBE SIZE:
ASTM A36 with 50 × 100 × 3mm and 40 × 80 × 3mm rectangle steel tube

DEPTH:
44" (1138 mm)

WEIGHT:
395 lbs (179 kg)

WIDTH:
92.2" (2342 mm)

COLOR:
Black

HEIGHT:
94.25" (2394 mm)

FFN-SM



Napa Smith Machine Plate Loaded

MATERIAL:
11 Gauge Steel

DEPTH:
44" (111.7 cm)

WIDTH:
92.2" (234.2 cm)

HEIGHT:
94.25" (239.4 cm)

TUBE SIZE:
ASTM A36 with 50 × 100 × 3mm and 40 × 80 × 3mm rectangle steel tube

WEIGHT:
395 lbs (179 kg)

COLOR:
Silver

FFN-3D-SMITH

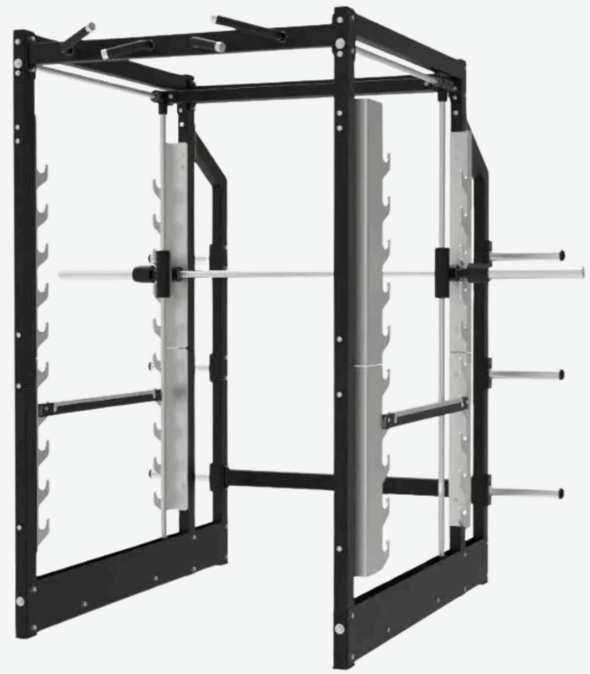

Newport 3D Dual Action Smith Machine

MATERIAL:
11 Gauge Steel

LENGTH:
76.7" (194.8 cm)

WIDTH:
92.9" (235.9 cm)

HEIGHT:
87.4" (221.9 cm)

MAIN TUBE:
50 × 75 × 3mm rectangular tube

SECONDARY TUBE:
60 x 120 x 3mm rectangular tube

WEIGHT:
683.4lb (310 kg)

COLOR:
Black

FFV-3D-Smith

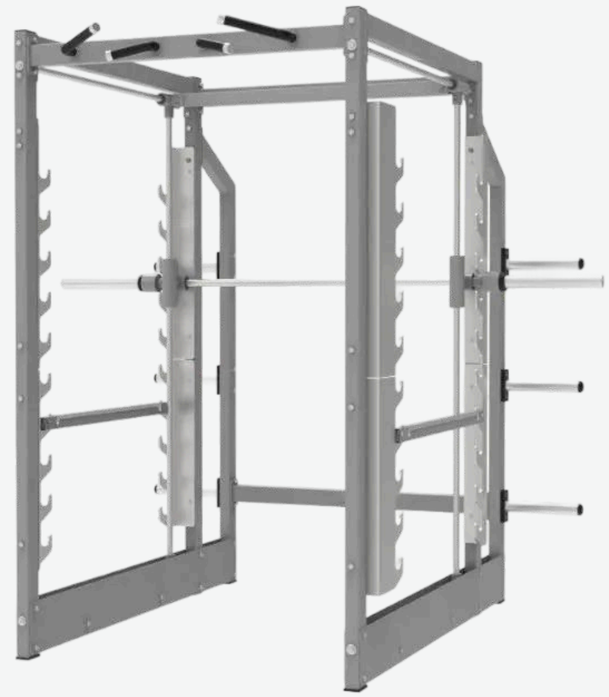

Venice 3D Dual Action Smith Machine

MATERIAL:
11 Gauge Steel

LENGTH:
76.7" (194.8 cm)

WIDTH:
92.9" (235.9 cm)

HEIGHT:
87.4" (221.9 cm)

MAIN TUBE:
50 × 75 × 3mm rectangular tube

SECONDARY TUBE:
60 x 120 x 3mm rectangular tube

WEIGHT:
683.4lb (310 kg)

COLOR:
Silver

FFM-PLCBC



Marin Iso-Lateral Chest/Back Combo Plate Loaded

MATERIAL 11 Gauge Steel, PU Leather, Foam, Rubber handles

PAINT COLOR Black **VINYL COLOR** Black

STEEL TUBE SIZE 50 mm × 80 mm × 3 mm

LENGTH 81" (205.7 cm) **WIDTH** 66.2" (168.1 cm)

HEIGHT 78.6" (199.6 cm)

WEIGHT 441 lbs (200 kg)

WEIGHT LOADING CAPACITY 612.89 lbs (278 kg)

FFN-PLCBC



Napa Iso-Lateral Chest/Back Combo Plate Loaded

MATERIAL 11 Gauge Steel, PU Leather, Foam, Rubber handles

PAINT COLOR Silver **VINYL COLOR** Black

STEEL TUBE SIZE 50 mm × 80 mm × 3 mm

LENGTH 81" (205.7 cm) **WIDTH** 66.2" (168.1 cm)

HEIGHT 78.6" (199.6 cm)

WEIGHT 441 lbs (200 kg)

WEIGHT LOADING CAPACITY 612.89 lbs (278 kg)

FFM-PLHSLP



Monster P/L Hack Squat Leg Press

MATERIAL
11 Gauge Steel, PU Leather, Foam, Rubber handles

PAINT COLOR Black **VINYL COLOR** Black

STEEL TUBE SIZE 50 mm × 80 mm × 3 mm

LENGTH 103.7" (263.5 cm) **WIDTH** 59.4" (151 cm)

HEIGHT 74" (188 cm)

WEIGHT 481.7 lbs (218.5 kg)

WEIGHT LOADING CAPACITY 970 lbs (440 kg)

FF-PLHSLP



P/L Hack Squat Leg Press Combo

MATERIAL 12 Gauge Steel, PU Leather, Foam, Rubber handles

PAINT COLOR Black **VINYL COLOR** Black

STEEL TUBE SIZE 50 mm × 70 mm × 2.5 mm

LENGTH 87" (221 cm) **WIDTH** 43" (107 cm)

HEIGHT 70" (177 cm)

WEIGHT 320 lbs (145.15 kg)

WEIGHT LOADING CAPACITY 793.66 lbs (360 kg)

FF-FL3



Freightweight Lat & Olympic Bench Gym

MATERIAL Steel, PU Leather, Rubber handles
PAINT COLOR Black **VINYL COLOR** Black
STEEL TUBE SIZE 50 mm × 70 mm × 1.5 mm
WEIGHT LOADING CAPACITY 793.66 lbs (360 kg)
LENGTH 78" (197 cm) **WIDTH** 48" (122 cm)
HEIGHT 81" (204 cm) **WEIGHT** 137 lb (62 kg)

FF-FL30



Freeweight Corner Leverage Gym

MATERIAL Steel, PU Leather, Foam, Rubber handles
PAINT COLOR Silver **VINYL COLOR** Black
WEIGHT LOADING CAPACITY 551.16 lbs (250 kg)
LENGTH 103" (261.6 cm) **WIDTH** 49.25" (125 cm)
HEIGHT 83" (210.8 cm)

FF-FL20



Freeweight Leverage Multi-Functional Bench

MATERIAL Steel, PU Leather, Rubber handles
PAINT COLOR Black **VINYL COLOR** Black
WEIGHT LOADING CAPACITY 551.16 lbs (250 kg)
LENGTH 111" (280 cm) **WIDTH** 58" (145 cm)
HEIGHT 56-77" (140 - 195 cm) **WEIGHT** 298 lbs (135 kg)

FF-FL70



FL70 Freeweight Leverage Gym System

MATERIAL Steel, PU Leather, Rubber handles
PAINT COLOR Blue/Black **VINYL COLOR** Black
WEIGHT LOADING CAPACITY 551.16 lbs (250 kg)
LENGTH 111.5" (283.2 cm) **WIDTH** 91" (231.1 cm)
HEIGHT 72.8" (184.9 cm) **WEIGHT** 353 lb (160 kg)

FF-FL100



FL100 Freeweight Leverage Gym System

MATERIAL Steel, PU Leather, Rubber handles
PAINT COLOR Yellow/Black **VINYL COLOR** Black
STEEL TUBE SIZE 50 mm × 80 mm × 2.7 mm
LENGTH 110.5" (280.8 cm) **WIDTH** 90.2" (229.2 cm)
HEIGHT 74.7" (189.8 cm) **WEIGHT** 403 lbs (183 kg)

FRENCH FITNESS

07

SELECTORIZED



FFE-SAC

Eureka Selectorized Abdominal Crunch

MATERIAL 11 Gauge Steel, Aluminum Collars, Rubber feet & Handles, Nylon Pulleys, Acrylic, Foam, PU Leather

PAINT COLOR Silver **VINYL COLOR** Black

STEEL TUBE SIZE 50 mm × 100 mm × 3 mm

LENGTH 52" (132 cm) **WIDTH** 46.9" (119 cm)

HEIGHT 63.8" (162 cm) **WEIGHT** 432 lbs (196 kg)

WEIGHT STACKS 220 lbs (100 kg)



FFP-TAC

Phoenix Total Abdominal Crunch

MATERIAL 11 Gauge Steel, Aluminum Collars, Rubber feet & Handles, Nylon Pulleys, Acrylic, Foam, PU Leather

PAINT COLOR Silver **VINYL COLOR** Black

STEEL TUBE SIZE 60 mm × 120 mm × 3 mm

LENGTH 39.3" (100 cm) **WIDTH** 47.2" (120 cm)

HEIGHT 61.4" (156 cm) **WEIGHT** 500 lbs (227 kg)

WEIGHT STACKS 209 lbs (95 kg)



FFB-SAC

FFB Black Selectorized Abdominal Crunch

MATERIAL 11 Gauge Steel, Aluminum Collars, Rubber feet & Handles, Nylon Pulleys, Acrylic, Foam, PU Leather

PAINT COLOR Black **VINYL COLOR** Black

STEEL TUBE SIZE 65 mm × 114 mm × 3 mm

LENGTH 48" (121.9 cm) **WIDTH** 48" (121.9 cm)

HEIGHT 65.25" (165.7 cm)

WEIGHT 432 lbs (196 kg)

WEIGHT STACKS 170 lbs (77 kg)



FFS-SAC

Silver Selectorized Abdominal Crunch

MATERIAL 11 Gauge Steel, Aluminum Collars, Rubber feet & Handles, Nylon Pulleys, Acrylic, Foam, PU Leather

PAINT COLOR Silver **VINYL COLOR** Black

STEEL TUBE SIZE 65 mm × 114 mm × 3 mm

LENGTH 48" (121.9 cm) **WIDTH** 48" (121.9 cm)

HEIGHT 65.25" (165.7 cm)

WEIGHT 432 lbs (196 kg)

WEIGHT STACKS 170 lbs (77 kg)



FFT-SHAC

Tahoe Selectorized Horizontal Ab Crunch

MATERIAL 11 Gauge Steel, Aluminum Collars, Rubber feet & Handles, Nylon Pulleys, Acrylic, Foam, PU Leather

PAINT COLOR Black **VINYL COLOR** Black

STEEL TUBE SIZE 50 mm × 100 mm × 3 mm

LENGTH 62" (158 cm) **WIDTH** 35" (89 cm)

HEIGHT 55" (140 cm) **WEIGHT** 515 lbs (234 kg)

WEIGHT STACKS 212 lbs (96 kg)



FFS-SHAC

Shasta Selectorized Horizontal Ab Crunch

MATERIAL 11 Gauge Steel, Aluminum Collars, Rubber feet & Handles, Nylon Pulleys, Acrylic, Foam, PU Leather

PAINT COLOR Silver **VINYL COLOR** Black

STEEL TUBE SIZE 50 mm × 100 mm × 3 mm

LENGTH 62" (158 cm) **WIDTH** 35" (89 cm)

HEIGHT 55" (140 cm) **WEIGHT** 515 lbs (234 kg)

WEIGHT STACKS 212 lbs (96 kg)



FFB-TR

Black Torso Rotation

MATERIAL 11 Gauge Steel, Aluminum Collars, Rubber feet & Handles, Nylon Pulleys, Acrylic, Foam, PU Leather

PAINT COLOR Black **VINYL COLOR** Black

STEEL TUBE SIZE 65 mm × 114 mm × 3 mm

LENGTH 65.37" (166 cm) **WIDTH** 35.5" (90.2 cm)

HEIGHT 48.75" (123.8 cm)

WEIGHT 370.4 lbs (168 kg)

WEIGHT STACKS 190 lbs (86 kg)



FFS-TR

Silver Torso Rotation

MATERIAL 11 Gauge Steel, Aluminum Collars, Rubber feet & Handles, Nylon Pulleys, Acrylic, Foam, PU Leather

PAINT COLOR Silver **VINYL COLOR** Black

STEEL TUBE SIZE 65 mm × 114 mm × 3 mm

LENGTH 65.37" (166 cm) **WIDTH** 35.5" (90.2 cm)

HEIGHT 48.75" (123.8 cm)

WEIGHT 370.4 lbs (168 kg)

WEIGHT STACKS 190 lbs (86 kg)



FFM-SBE

Marin Selectorized Back Extension

MATERIAL 11 Gauge Steel, Aluminum Collars, Rubber feet & Handles, Nylon Pulleys, Acrylic, Foam, PU Leather

PAINT COLOR Black **VINYL COLOR** Black

STEEL TUBE SIZE 50 mm × 80 mm × 3 mm

LENGTH 40" (102 cm) **WIDTH** 46" (117 cm)

HEIGHT 64.5" (164 cm)

WEIGHT 427.7 lbs (194 kg)

WEIGHT STACKS 210 lbs (96 kg)



FFN-SBE

Napa Selectorized Back Extension

MATERIAL 11 Gauge Steel, Aluminum Collars, Rubber feet & Handles, Nylon Pulleys, Acrylic, Foam, PU Leather

PAINT COLOR Silver **VINYL COLOR** Black

STEEL TUBE SIZE 50 mm × 80 mm × 3 mm

LENGTH 40" (102 cm) **WIDTH** 46" (117 cm)

HEIGHT 64.5" (164 cm)

WEIGHT 427.7 lbs (194 kg)

WEIGHT STACKS 210 lbs (96 kg)



FFP-RTR

Phoenix Rotary Torso Rotation

MATERIAL 11 Gauge Steel, Aluminum Collars, Rubber feet & Handles, Nylon Pulleys, Acrylic, Foam, PU Leather

PAINT COLOR Silver **VINYL COLOR** Black

STEEL TUBE SIZE 60 mm × 120 mm × 3 mm

LENGTH 44.8" (114 cm) **WIDTH** 46" (117 cm)

HEIGHT 59" (150 cm) **WEIGHT** 390 lbs (177 kg)

WEIGHT STACKS 143 lbs (65 kg)



FFB-SS-AC

Black Single Stack Abdominal Crunch

MATERIAL 11 Gauge Steel, Aluminum Collars, Rubber feet & Handles, Nylon Pulleys, Acrylic, Foam, PU Leather

PAINT COLOR Black **VINYL COLOR** Black

STEEL TUBE SIZE 40 mm × 80 mm × 3 mm

LENGTH 39" (99 cm) **WIDTH** 28" (71 cm)

HEIGHT 56" (142 cm) **WEIGHT** 530 lbs (241 kg)

WEIGHT STACKS 330 lbs (150 kg)

FFNS-AC



Newport Selectorized Abdominal Crunch

MATERIAL:
11 Gauge Steel, Aluminum Collars, Rubber feet & Handles, Nylon Pulleys, Acrylic, Foam, PU Leather

PAINT COLOR:
Black

VINYL COLOR:
Black

STEEL TUBE SIZE:
50 mm × 100 mm × 3 mm

WEIGHT:
432 lbs (196 kg)

WEIGHT STACKS:
220 lbs (100 kg)

LENGTH:
52" (132 cm)

WIDTH:
46.9" (119 cm)

HEIGHT:
63.8" (162 cm)

FFNS-TR



Newport Selectorized Torso Rotation

MATERIAL:
11 Gauge Steel, Aluminum Collars, Rubber feet & Handles, Nylon Pulleys, Acrylic, Foam, PU Leather

PAINT COLOR:
Black

VINYL COLOR:
Black

STEEL TUBE SIZE:
50 mm × 100 mm × 3 mm

WEIGHT:
???

WEIGHT STACKS:
220 lbs (100 kg)

LENGTH:
61" (154.9 cm)

WIDTH:
38.5" (97.8 cm)

HEIGHT:
65" (165.1 cm)



FFT-SP

Tahoe Shoulder Press

MATERIAL 11 Gauge Steel, Aluminum Collars, Rubber feet & Handles, Nylon Pulleys, Acrylic, Foam, PU Leather

PAINT COLOR Black **VINYL COLOR** Black

STEEL TUBE SIZE 50 mm × 100 mm × 3 mm

LENGTH 60" (152 cm) **WIDTH** 56" (142 cm)

HEIGHT 64" (163 cm) **WEIGHT** 520 lbs (236 kg)

WEIGHT STACKS 212 lbs (96 kg)



FFS-SP

Shasta Shoulder Press

MATERIAL 11 Gauge Steel, Aluminum Collars, Rubber feet & Handles, Nylon Pulleys, Acrylic, Foam, PU Leather

PAINT COLOR Silver **VINYL COLOR** Black

STEEL TUBE SIZE 50 mm × 100 mm × 3 mm

LENGTH 60" (152 cm) **WIDTH** 56" (142 cm)

HEIGHT 64" (163 cm) **WEIGHT** 520 lbs (236 kg)

WEIGHT STACKS 212 lbs (96 kg)



FFT-LR

Tahoe Lateral Raise

MATERIAL 11 Gauge Steel, Aluminum Collars, Rubber feet & Handles, Nylon Pulleys, Acrylic, Foam, PU Leather

PAINT COLOR Black **VINYL COLOR** Black

STEEL TUBE SIZE 50 mm × 100 mm × 3 mm

LENGTH 42" (107 cm) **WIDTH** 37" (94 cm)

HEIGHT 55" (140 cm) **WEIGHT** 535 lbs (243 kg)

WEIGHT STACKS 220 lbs (100 kg)



FFS-LR

Shasta Lateral Raise

MATERIAL 11 Gauge Steel, Aluminum Collars, Rubber feet & Handles, Nylon Pulleys, Acrylic, Foam, PU Leather

PAINT COLOR Silver **VINYL COLOR** Black

STEEL TUBE SIZE 50 mm × 100 mm × 3 mm

LENGTH 42" (107 cm) **WIDTH** 37" (94 cm)

HEIGHT 55" (140 cm) **WEIGHT** 535 lbs (243 kg)

WEIGHT STACKS 220 lbs (100 kg)



FFB-PPF

Black Pectoral Pec Fly

MATERIAL 11 Gauge Steel, Aluminum Collars, Rubber feet & Handles, Nylon Pulleys, Acrylic, Foam, PU Leather

PAINT COLOR Black **VINYL COLOR** Black

STEEL TUBE SIZE 65 mm × 114 mm × 3 mm

LENGTH 50" (127 cm) **WIDTH** 38" (97 cm)

HEIGHT 64" (163 cm) **WEIGHT** 525 lbs (231 kg)

WEIGHT STACKS 192 lbs (87 kg)



FFS-PF

Silver Pectoral Pec Fly

MATERIAL 11 Gauge Steel, Aluminum Collars, Rubber feet & Handles, Nylon Pulleys, Acrylic, Foam, PU Leather

PAINT COLOR Silver **VINYL COLOR** Black

STEEL TUBE SIZE 65 mm × 114 mm × 3 mm

LENGTH 50" (127 cm) **WIDTH** 38" (97 cm)

HEIGHT 64" (163 cm) **WEIGHT** 525 lbs (231 kg)

WEIGHT STACKS 192 lbs (87 kg)



FFS-CP

Shasta Chest Press

MATERIAL 11 Gauge Steel, Aluminum Collars, Rubber feet & Handles, Nylon Pulleys, Acrylic, Foam, PU Leather

PAINT COLOR Silver **VINYL COLOR** Black

STEEL TUBE SIZE 50 mm × 100 mm × 3 mm

LENGTH 41" (104 cm) **WIDTH** 57" (145 cm)

HEIGHT 64" (163 cm) **WEIGHT** 560 lbs (254 kg)

WEIGHT STACKS 212 lbs (96 kg)



FFT-CP

Tahoe Chest Press

MATERIAL 11 Gauge Steel, Aluminum Collars, Rubber feet & Handles, Nylon Pulleys, Acrylic, Foam, PU Leather

PAINT COLOR Black **VINYL COLOR** Black

STEEL TUBE SIZE 50 mm × 100 mm × 3 mm

LENGTH 41" (104 cm) **WIDTH** 57" (145 cm)

HEIGHT 64" (163 cm) **WEIGHT** 560 lbs (254 kg)

WEIGHT STACKS 212 lbs (96 kg)

FFS-PFRD



Shasta Pec Fly / Rear Delt

MATERIAL:
11 Gauge Steel, Aluminum Collars, Rubber feet & Handles, Nylon Pulleys, Acrylic, Foam, PU Leather

PAINT COLOR:
Silver

VINYL COLOR:
Black

STEEL TUBE SIZE:
50 mm × 100 mm × 3 mm

WEIGHT:
580 lbs (263 kg)

WEIGHT STACKS:
212 lbs (96 kg)

LENGTH:
40.5" (102.9 cm)

WIDTH:
33" (83.8 cm)

HEIGHT:
79" (200.7 cm)

FFB-DS-CP



Black Dual Stack Chest Press

MATERIAL 11 Gauge Steel, Aluminum Collars, Rubber feet & Handles, Nylon Pulleys, Acrylic, Foam, PU Leather

PAINT COLOR Black **VINYL COLOR** Black

STEEL TUBE SIZE 40 mm × 80 mm × 3 mm

LENGTH 40.2" (102 cm) **WIDTH** 68.1" (173 cm)

HEIGHT 77.2" (196 cm)

WEIGHT 765 lbs (347 KG)

WEIGHT STACKS 330 lbs (150 kg)

FFB-DS-DP



Black Dual Stack Decline Press

MATERIAL 11 Gauge Steel, Aluminum Collars, Rubber feet & Handles, Nylon Pulleys, Acrylic, Foam, PU Leather

PAINT COLOR Black **VINYL COLOR** Black

STEEL TUBE SIZE 40 mm × 80 mm × 3 mm

LENGTH 38.9 (99 cm) **WIDTH** 64" (163 cm)

HEIGHT 66" (168 cm) **WEIGHT** 560 lbs (254 kg)

WEIGHT STACKS 754 lbs (342 KG)

FFB-DS-IP



Black Dual Stack Incline Press

MATERIAL:
11 Gauge Steel, Aluminum Collars, Rubber feet & Handles, Nylon Pulleys, Acrylic, Foam, PU Leather

PAINT COLOR:
Black

VINYL COLOR:
Black

STEEL TUBE SIZE:
40 mm × 80 mm × 3 mm

WEIGHT:
765 lbs (347 KG)

WEIGHT STACKS:
330 lbs (150 kg)

LENGTH:
40" (102 cm)

WIDTH:
68" (173 cm)

HEIGHT:
77" (196 cm)

FFB-DS-SP



Black Dual Stack Shoulder Press

MATERIAL:
11 Gauge Steel, Aluminum Collars, Rubber feet & Handles, Nylon Pulleys, Acrylic, Foam, PU Leather

PAINT COLOR:
Black

VINYL COLOR:
Black

STEEL TUBE SIZE:
40 mm × 80 mm × 3 mm

WEIGHT:
745 lbs (338 KG)

WEIGHT STACKS:
330 lbs (150 kg)

LENGTH:
44.8" (114 cm)

WIDTH:
62.2" (158 cm)

HEIGHT:
53.9" (137 cm)



FFB-TPSD

Black Triceps Press Seated Dip

MATERIAL 11 Gauge Steel, Aluminum Collars, Rubber feet & Handles, Nylon Pulleys, Acrylic, Foam, PU Leather

PAINT COLOR Black **VINYL COLOR** Black

STEEL TUBE SIZE 65 mm × 114 mm × 3 mm

LENGTH 60" (152.4 cm) **WIDTH** 42.5" (108 cm)

HEIGHT 65.25" (165.7 cm)

WEIGHT 496 lbs (225 kg)

WEIGHT STACKS 190 lbs (86 kg)



FFS-TPSD

Silver Triceps Press Seated Dip

MATERIAL 11 Gauge Steel, Aluminum Collars, Rubber feet & Handles, Nylon Pulleys, Acrylic, Foam, PU Leather

PAINT COLOR Silver **VINYL COLOR** Black

STEEL TUBE SIZE 65 mm × 114 mm × 3 mm

LENGTH 60" (152.4 cm) **WIDTH** 42.5" (108 cm)

HEIGHT 60" (152.4 cm)

WEIGHT 496 lbs (225 kg)

WEIGHT STACKS 190 lbs (86 kg)



FFT-BAC

Tahoe Bicep Arm Curl

MATERIAL 11 Gauge Steel, Aluminum Collars, Rubber feet & Handles, Nylon Pulleys, Acrylic, Foam, PU Leather

PAINT COLOR Black **VINYL COLOR** Black

STEEL TUBE SIZE 50 mm × 100 mm × 2.5 mm

LENGTH 45" (114 cm) **WIDTH** 41" (104 cm)

HEIGHT 55" (140 cm) **WEIGHT** 450 lbs (204 kg)

WEIGHT STACKS 212 lbs (96 kg)



FFS-BAC

Shasta Bicep Arm Curl

MATERIAL 11 Gauge Steel, Aluminum Collars, Rubber feet & Handles, Nylon Pulleys, Acrylic, Foam, PU Leather

PAINT COLOR Silver **VINYL COLOR** Black

STEEL TUBE SIZE 50 mm × 100 mm × 2.5 mm

LENGTH 45" (114 cm) **WIDTH** 41" (104 cm)

HEIGHT 55" (140 cm) **WEIGHT** 450 lbs (204 kg)

WEIGHT STACKS 212 lbs (96 kg)



FFNS-TP

Newport Selectorized Triceps Press

MATERIAL 11 Gauge Steel, Aluminum Collars, Rubber feet & Handles, Nylon Pulleys, Acrylic, Foam, PU Leather

PAINT COLOR Silver **VINYL COLOR** Black

STEEL TUBE SIZE 50 mm × 100 mm × 3 mm

LENGTH 63.3" (161 cm) **WIDTH** 44.4" (112.9 cm)

HEIGHT 58.3" (148.2 cm)

WEIGHT 485 lbs (220 kg)

WEIGHT STACKS 220 lbs (100 kg)



FFA-SDCA

Aspen Standing Dip/ Chin Assist

MATERIAL 11 Gauge Steel, Aluminum Collars, Rubber feet & Handles, Nylon Pulleys, Acrylic, Foam, PU Leather

PAINT COLOR Black **VINYL COLOR** Black

STEEL TUBE SIZE 50 mm × 800 mm × 3 mm

LENGTH 68.8" (175 cm) **WIDTH** 45.2" (115 cm)

HEIGHT 96.4" (245 cm)

WEIGHT 540 lbs (245 kg)

WEIGHT STACKS 198 lbs (90 kg)



FFT-TAE

Tahoe Tricep Arm Extension

MATERIAL 11 Gauge Steel, Aluminum Collars, Rubber feet & Handles, Nylon Pulleys, Acrylic, Foam, PU Leather

PAINT COLOR Black **VINYL COLOR** Black

STEEL TUBE SIZE 50 mm × 100 mm × 2.5 mm

LENGTH 45" (114 cm) **WIDTH** 44" (112 cm)

HEIGHT 55" (140 cm) **WEIGHT** 470 lbs (213 kg)

WEIGHT STACKS 212 lbs (96 kg)



FFS-TAE

Shasta Tricep Arm Extension

MATERIAL 11 Gauge Steel, Aluminum Collars, Rubber feet & Handles, Nylon Pulleys, Acrylic, Foam, PU Leather

PAINT COLOR Silver **VINYL COLOR** Black

STEEL TUBE SIZE 50 mm × 100 mm × 2.5 mm

LENGTH 45" (114 cm) **WIDTH** 44" (112 cm)

HEIGHT 55" (140 cm) **WEIGHT** 470 lbs (213 kg)

WEIGHT STACKS 212 lbs (96 kg)

FFB-DS-BAC



Black Dual Stack Biceps Arm Curl

MATERIAL:
11 Gauge Steel, Aluminum Collars, Rubber feet & Handles, Nylon Pulleys, Acrylic, Foam, PU Leather

PAINT COLOR:
Black

VINYL COLOR:
Black

STEEL TUBE SIZE:
40 mm × 80 mm × 3 mm

WEIGHT:
562 lbs (255 kg)

WEIGHT STACKS:
220 lbs (100 kg)

LENGTH:
38.19" (97 cm)

WIDTH:
57.87" (147 cm)

HEIGHT:
59.06" (150 cm)

FFB-DS-TE



Black Dual Stack Tricep Extension

MATERIAL:
11 Gauge Steel, Aluminum Collars, Rubber feet & Handles, Nylon Pulleys, Acrylic, Foam, PU Leather

PAINT COLOR:
Black

VINYL COLOR:
Black

STEEL TUBE SIZE:
40 mm × 80 mm × 3 mm

WEIGHT:
628 lbs (285 kg)

WEIGHT STACKS:
220 lbs (100 kg)

LENGTH:
63.3" (160.8 cm)

WIDTH:
44.4" (112.8 cm)

HEIGHT:
58.3" (148 cm)



FFS-CLP

Shasta Cable Lat Pulldown

MATERIAL 11 Gauge Steel, Aluminum Collars, Rubber feet & Handles, Nylon Pulleys, Acrylic, Foam, PU Leather

PAINT COLOR Silver **VINYL COLOR** Black

STEEL TUBE SIZE 50 mm × 100 mm × 3 mm

LENGTH 58.5" (148.6 cm) **WIDTH** 33.9" (86.1 cm)

HEIGHT 89.5" (227.3 cm)

WEIGHT 545 lbs (247 kg)

WEIGHT STACKS 212 lbs (96 kg)



FFT-CLP

Tahoe Cable Lat Pulldown

MATERIAL 11 Gauge Steel, Aluminum Collars, Rubber feet & Handles, Nylon Pulleys, Acrylic, Foam, PU Leather

PAINT COLOR Black **VINYL COLOR** Black

STEEL TUBE SIZE 50 mm × 100 mm × 3 mm

LENGTH 58.5" (148.6 cm) **WIDTH** 33.9" (86.1 cm)

HEIGHT 89.5" (227.3 cm)

WEIGHT 545 lbs (247 kg)

WEIGHT STACKS 212 lbs (96 kg)



FFS-FLP

Shasta Fixed Lat Pulldown

MATERIAL 11 Gauge Steel, Aluminum Collars, Rubber feet & Handles, Nylon Pulleys, Acrylic, Foam, PU Leather

PAINT COLOR Silver **VINYL COLOR** Black

STEEL TUBE SIZE 50 mm × 100 mm × 3 mm

LENGTH 55" (139 cm) **WIDTH** 58" (147 cm)

HEIGHT 73" (185 cm) **WEIGHT** 620 lbs (281 kg)

WEIGHT STACKS 212 lbs (96 kg)



FFT-FLP

Tahoe Fixed Lat Pulldown

MATERIAL 11 Gauge Steel, Aluminum Collars, Rubber feet & Handles, Nylon Pulleys, Acrylic, Foam, PU Leather

PAINT COLOR Black **VINYL COLOR** Black

STEEL TUBE SIZE 50 mm × 100 mm × 3 mm

LENGTH 55" (139 cm) **WIDTH** 58" (147 cm)

HEIGHT 73" (185 cm) **WEIGHT** 620 lbs (281 kg)

WEIGHT STACKS 212 lbs (96 kg)

FFS-SR



Shasta Seated Row

MATERIAL:
11 Gauge Steel, Aluminum Collars, Rubber feet & Handles, Nylon Pulleys, Acrylic, Foam, PU Leather

PAINT COLOR:
Silver

VINYL COLOR:
Black

STEEL TUBE SIZE:
50 mm × 100 mm × 3 mm

WEIGHT:
590 lbs (268 kg)

WEIGHT STACKS:
212 lbs (96 kg)

LENGTH:
52" (132 cm)

WIDTH:
34" (86 cm)

HEIGHT:
71" (180 cm)

FFT-SR



Tahoe Seated Row

MATERIAL:
11 Gauge Steel, Aluminum Collars, Rubber feet & Handles, Nylon Pulleys, Acrylic, Foam, PU Leather

PAINT COLOR:
Black

VINYL COLOR:
Black

STEEL TUBE SIZE:
50 mm × 100 mm × 3 mm

WEIGHT:
590 lbs (268 kg)

WEIGHT STACKS:
212 lbs (96 kg)

LENGTH:
52" (132 cm)

WIDTH:
34" (86 cm)

HEIGHT:
71" (180 cm)

FFB-DS-FLPD



Black Dual Stack Front Lat Pulldown

MATERIAL:
11 Gauge Steel, Aluminum Collars, Rubber feet & Handles, Nylon Pulleys, Acrylic, Foam, PU Leather

PAINT COLOR:
Black

VINYL COLOR:
Black

STEEL TUBE SIZE:
40 mm × 80 mm × 3 mm

WEIGHT:
793 lbs (360 KG)

WEIGHT STACKS:
330 lbs (150 kg)

LENGTH:
48" (122 cm)

WIDTH:
57.8" (147 cm)

HEIGHT:
79.9" (203 cm)

FFB-DS-HR



Black Dual Stack High Row

MATERIAL:
11 Gauge Steel, Aluminum Collars, Rubber feet & Handles, Nylon Pulleys, Acrylic, Foam, PU Leather

PAINT COLOR:
Black

VINYL COLOR:
Black

STEEL TUBE SIZE:
40 mm × 80 mm × 3 mm

WEIGHT:
780 lbs (354 KG)

WEIGHT STACKS:
330 lbs (150 kg)

LENGTH:
46.8" (119 cm)

WIDTH:
72" (119 cm)

HEIGHT:
77.2" (196 cm)

FFB-DS-LR



Black Dual Stack Low Row

MATERIAL:
11 Gauge Steel, Aluminum Collars, Rubber feet & Handles, Nylon Pulleys, Acrylic, Foam, PU Leather

PAINT COLOR:
Black

VINYL COLOR:
Black

STEEL TUBE SIZE:
40 mm × 80 mm × 3 mm

WEIGHT:
765 lbs (347 KG)

WEIGHT STACKS:
330 lbs (150 kg)

LENGTH:
51.2" (130 cm)

WIDTH:
62.2" (158 cm)

HEIGHT:
81.9" (208 cm)

FFB-GM



Black Glute Machine

MATERIAL 11 Gauge Steel, Aluminum Collars, Rubber feet & Handles, Nylon Pulleys, Acrylic, Foam, PU Leather

PAINT COLOR Black **VINYL COLOR** Black

STEEL TUBE SIZE 40 mm × 80 mm × 3 mm

LENGTH 73" (185.4 cm) **WIDTH** 36" (91.4 cm)

HEIGHT 66" (167.6 cm)

WEIGHT 448 lbs (203 kg)

WEIGHT STACKS 190 lbs (86 kg)

FFS-GM



Silver Glute Machine

MATERIAL 11 Gauge Steel, Aluminum Collars, Rubber feet & Handles, Nylon Pulleys, Acrylic, Foam, PU Leather

PAINT COLOR Silver **VINYL COLOR** Black

STEEL TUBE SIZE 40 mm × 80 mm × 3 mm

LENGTH 73" (185.4 cm) **WIDTH** 36" (91.4 cm)

HEIGHT 66" (167.6 cm)

WEIGHT 448 lbs (203 kg)

WEIGHT STACKS 190 lbs (86 kg)

FFT-PLC



Tahoe Prone Leg Curl

MATERIAL 11 Gauge Steel, Aluminum Collars, Rubber feet & Handles, Nylon Pulleys, Acrylic, Foam, PU Leather

PAINT COLOR Black **VINYL COLOR** Black

STEEL TUBE SIZE 50 mm × 100 mm × 3 mm

LENGTH 65" (165 cm) **WIDTH** 48" (121.9 cm)

HEIGHT 55" (140 cm) **WEIGHT** 475 lbs(216 kg)

WEIGHT STACKS 220 lbs (100 kg)

FFS-PLC



Shasta Prone Leg Curl

MATERIAL 11 Gauge Steel, Aluminum Collars, Rubber feet & Handles, Nylon Pulleys, Acrylic, Foam, PU Leather

PAINT COLOR Silver **VINYL COLOR** Black

STEEL TUBE SIZE 50 mm × 100 mm × 3 mm

LENGTH 65" (165 cm) **WIDTH** 48" (121.9 cm)

HEIGHT 55" (140 cm) **WEIGHT** 475 lbs(216 kg)

WEIGHT STACKS 220 lbs (100 kg)

FFT-SLC



Tahoe Seated Leg Curl

MATERIAL 11 Gauge Steel, Aluminum Collars, Rubber feet & Handles, Nylon Pulleys, Acrylic, Foam, PU Leather

PAINT COLOR Black **VINYL COLOR** Black

STEEL TUBE SIZE 50 mm × 100 mm × 3 mm

LENGTH 55" (140 cm) **WIDTH** 34" (86 cm)

HEIGHT 55" (140 cm) **WEIGHT** 515 lbs (234 kg)

WEIGHT STACKS 212 lbs (96 kg)

FFS-SLC



Shasta Seated Leg Curl

MATERIAL 11 Gauge Steel, Aluminum Collars, Rubber feet & Handles, Nylon Pulleys, Acrylic, Foam, PU Leather

PAINT COLOR Silver **VINYL COLOR** Black

STEEL TUBE SIZE 50 mm × 100 mm × 3 mm

LENGTH 55" (140 cm) **WIDTH** 34" (86 cm)

HEIGHT 55" (140 cm) **WEIGHT** 515 lbs (234 kg)

WEIGHT STACKS 212 lbs (96 kg)

FFB-SLC



Black Seated Leg Curl

MATERIAL 11 Gauge Steel, Aluminum Collars, Rubber feet & Handles, Nylon Pulleys, Acrylic, Foam, PU Leather

PAINT COLOR Black **VINYL COLOR** Black

STEEL TUBE SIZE 40 mm × 80 mm × 3 mm

LENGTH ??? **WIDTH** ??? **HEIGHT** ???

WEIGHT 524.7 lbs (238 kg)

WEIGHT STACKS 190 lbs (86 kg)

FFB-SLE



Black Seated Leg Extension

MATERIAL 11 Gauge Steel, Aluminum Collars, Rubber feet & Handles, Nylon Pulleys, Acrylic, Foam, PU Leather

PAINT COLOR Black **VINYL COLOR** Black

STEEL TUBE SIZE 40 mm × 80 mm × 3 mm

LENGTH ??? **WIDTH** ??? **HEIGHT** ???

WEIGHT 498 lbs (226 kg)

WEIGHT STACKS 190 lbs (86 kg)



FFT-SLE

Tahoe Seated Leg Extension

MATERIAL 11 Gauge Steel, Aluminum Collars, Rubber feet & Handles, Nylon Pulleys, Acrylic, Foam, PU Leather

PAINT COLOR Black **VINYL COLOR** Black

STEEL TUBE SIZE 50 mm × 100 mm × 3 mm

LENGTH 47" (119 cm) **WIDTH** 41" (104 cm)

HEIGHT 64" (163 cm) **WEIGHT** 570 lbs (368 kg)

WEIGHT STACKS 220 lbs (100 kg)



FFS-SLE

Shasta Seated Leg Extension

MATERIAL 11 Gauge Steel, Aluminum Collars, Rubber feet & Handles, Nylon Pulleys, Acrylic, Foam, PU Leather

PAINT COLOR Silver **VINYL COLOR** Black

STEEL TUBE SIZE 50 mm × 100 mm × 3 mm

LENGTH 47" (119 cm) **WIDTH** 41" (104 cm)

HEIGHT 64" (163 cm) **WEIGHT** 570 lbs (368 kg)

WEIGHT STACKS 220 lbs (100 kg)



FFB-SLP

Black Seated Leg Press

MATERIAL 11 Gauge Steel, Aluminum Collars, Rubber feet & Handles, Nylon Pulleys, Acrylic, Foam, PU Leather

PAINT COLOR Black **VINYL COLOR** Black

STEEL TUBE SIZE 50 mm × 100 mm × 3 mm

LENGTH 79" (201 cm) **WIDTH** 41" (102 cm)

HEIGHT 71" (180 cm) **WEIGHT** 573 lbs (260 kg)

WEIGHT STACKS 265 lbs (120 kg)



FFS-SLP

Silver Seated Leg Press

MATERIAL 11 Gauge Steel, Aluminum Collars, Rubber feet & Handles, Nylon Pulleys, Acrylic, Foam, PU Leather

PAINT COLOR Silver **VINYL COLOR** Black

STEEL TUBE SIZE 50 mm × 100 mm × 3 mm

LENGTH 79" (201 cm) **WIDTH** 41" (102 cm)

HEIGHT 71" (180 cm) **WEIGHT** 573 lbs (260 kg)

WEIGHT STACKS 265 lbs (120 kg)



FFB-LPS

Black Seated Leg Press Sled / Calf Raise

MATERIAL 11 Gauge Steel, Aluminum Collars, Rubber feet & Handles, Nylon Pulleys, Acrylic, Foam, PU Leather

PAINT COLOR Black **VINYL COLOR** Black

STEEL TUBE SIZE 50 mm × 100 mm × 3 mm

LENGTH 79.1" (201 cm) **WIDTH** 40.1" (102 cm)

HEIGHT 71.2" (81 cm) **WEIGHT** 449 lbs (203.7 kg)

WEIGHT STACKS 408 lbs (185.1 kg)



FFS-LPS

Silver Seated Leg Press Sled / Calf Raise

MATERIAL 11 Gauge Steel, Aluminum Collars, Rubber feet & Handles, Nylon Pulleys, Acrylic, Foam, PU Leather

PAINT COLOR Silver **VINYL COLOR** Black

STEEL TUBE SIZE 50 mm × 100 mm × 3 mm

LENGTH 79.1" (201 cm) **WIDTH** 40.1" (102 cm)

HEIGHT 71.2" (81 cm) **WEIGHT** 449 lbs (203.7 kg)

WEIGHT STACKS 408 lbs (185.1 kg)



FFM-SHLP

Marin Selectorized Horizontal Leg Press

MATERIAL 11 Gauge Steel, Aluminum Collars, Rubber feet & Handles, Nylon Pulleys, Acrylic, Foam, PU Leather

PAINT COLOR Black **VINYL COLOR** Black

STEEL TUBE SIZE 50 mm × 100 mm × 3 mm

LENGTH 86" (218.6 cm) **WIDTH** 38.4" (97.6 cm)

HEIGHT 80.3" (204 cm)

WEIGHT 595 lbs (270 kg)

WEIGHT STACKS 316 lbs (143.3 kg)



FFN-SHLP

Napa Selectorized Horizontal Leg Press

MATERIAL 11 Gauge Steel, Aluminum Collars, Rubber feet & Handles, Nylon Pulleys, Acrylic, Foam, PU Leather

PAINT COLOR Silver **VINYL COLOR** Black

STEEL TUBE SIZE 50 mm × 100 mm × 3 mm

LENGTH 86" (218.6 cm) **WIDTH** 38.4" (97.6 cm)

HEIGHT 80.3" (204 cm)

WEIGHT 595 lbs (270 kg)

WEIGHT STACKS 316 lbs (143.3 kg)

FFB-SS-VS



Black Single Stack V-Squat

MATERIAL 11 Gauge Steel, Aluminum Collars, Rubber feet & Handles, Nylon Pulleys, Acrylic, Foam, PU Leather

PAINT COLOR Black **VINYL COLOR** Black

STEEL TUBE SIZE 40 mm × 80 mm × 3 mm

LENGTH 90" (244 cm) **WIDTH** 31" (79 cm)

HEIGHT 79" (201 cm) **WEIGHT** 752 lbs (341 kg)

WEIGHT STACKS 220 lbs (100 kg)

FFNS-GM



Newport Selectorized Glute Machine

MATERIAL 11 Gauge Steel, Aluminum Collars, Rubber feet & Handles, Nylon Pulleys, Acrylic, Foam, PU Leather

PAINT COLOR Black **VINYL COLOR** Black

STEEL TUBE SIZE 50 mm × 100 mm × 3 mm

LENGTH 71" **WIDTH** 43" (45.5" with swivel part)

HEIGHT 54.5" **WEIGHT** 752 lbs (341 kg)

WEIGHT STACKS 220 lbs (100 kg)

FFM-SHC



Marin Selectorized Horizontal Calf

MATERIAL 11 Gauge Steel, Aluminum Collars, Rubber feet & Handles, Nylon Pulleys, Acrylic, Foam, PU Leather

PAINT COLOR Black **VINYL COLOR** Black

STEEL TUBE SIZE 50 mm × 80 mm × 3 mm

LENGTH 41.7" (106 cm) **WIDTH** 69.7" (177 cm)

HEIGHT 64.5" (164 cm)

WEIGHT 415.6 lbs (188.5 kg)

WEIGHT STACKS 210 lbs (96 kg)

FFN-SHC



Napa Selectorized Horizontal Calf

MATERIAL 11 Gauge Steel, Aluminum Collars, Rubber feet & Handles, Nylon Pulleys, Acrylic, Foam, PU Leather

PAINT COLOR Silver **VINYL COLOR** Black

STEEL TUBE SIZE 50 mm × 80 mm × 3 mm

LENGTH 41.7" (106 cm) **WIDTH** 69.7" (177 cm)

HEIGHT 64.5" (164 cm)

WEIGHT 415.6 lbs (188.5 kg)

WEIGHT STACKS 210 lbs (96 kg)

FFT-SSC



Tahoe Selectorized Standing Calf Raise

MATERIAL 11 Gauge Steel, Aluminum Collars, Rubber feet & Handles, Nylon Pulleys, Acrylic, Foam, PU Leather

PAINT COLOR Black **VINYL COLOR** Black

STEEL TUBE SIZE 40 mm × 80 mm × 3 mm

LENGTH 58" (148 cm) **WIDTH** 45" (114 cm)

HEIGHT 72" (183 cm) **WEIGHT** 680 lbs (308 kg)

WEIGHT STACKS 408 lbs (185.1 kg)

FFS-SSC



Shasta Selectorized Standing Calf Raise

MATERIAL 11 Gauge Steel, Aluminum Collars, Rubber feet & Handles, Nylon Pulleys, Acrylic, Foam, PU Leather

PAINT COLOR Silver **VINYL COLOR** Black

STEEL TUBE SIZE 40 mm × 80 mm × 3 mm

LENGTH 58" (148 cm) **WIDTH** 45" (114 cm)

HEIGHT 72" (183 cm) **WEIGHT** 680 lbs (308 kg)

WEIGHT STACKS 408 lbs (185.1 kg)

FFS-HAOT



Shasta Hip Abductor (Outer Thigh)

MATERIAL 11 Gauge Steel, Aluminum Collars, Rubber feet & Handles, Nylon Pulleys, Acrylic, Foam, PU Leather

PAINT COLOR Silver **VINYL COLOR** Black

STEEL TUBE SIZE 50 mm × 100 mm × 3 mm

LENGTH 72" (182.9 cm) **WIDTH** 26" (66 cm)

HEIGHT 56" (140 cm) **WEIGHT** 488 lbs (221 kg)

WEIGHT STACKS 212 lbs (96 kg)

FFT-HAOT



Tahoe Hip Abductor (Outer Thigh)

MATERIAL 11 Gauge Steel, Aluminum Collars, Rubber feet & Handles, Nylon Pulleys, Acrylic, Foam, PU Leather

PAINT COLOR Black **VINYL COLOR** Black

STEEL TUBE SIZE 50 mm × 100 mm × 3 mm

LENGTH 60" (152.4 cm) **WIDTH** 25.5" (64.8 cm)

HEIGHT 64.25" (163.2 cm)

WEIGHT 500 lbs (226.8 kg)

WEIGHT STACKS 212 lbs (96 kg)

FFB-PLC



Black Prone Leg Curl

MATERIAL:
11 Gauge Steel, Aluminum Collars, Rubber feet & Handles, Nylon Pulleys, Acrylic, Foam, PU Leather

PAINT COLOR:
Black

VINYL COLOR:
Black

STEEL TUBE SIZE:
40 mm × 80 mm × 3 mm

WEIGHT:
374 lbs (170 kg)

WEIGHT STACKS:
190 lbs (86 kg)

LENGTH:
???

WIDTH:
???

HEIGHT:
???

FFT-HAIT



Tahoe Hip Adductor (Inner Thigh)

MATERIAL 11 Gauge Steel, Aluminum Collars, Rubber feet & Handles, Nylon Pulleys, Acrylic, Foam, PU Leather

PAINT COLOR Black **VINYL COLOR** Black

STEEL TUBE SIZE 50 mm × 100 mm × 3 mm

LENGTH 72" (182.9 cm) **WIDTH** 26" (66 cm)

HEIGHT 56" (140 cm) **WEIGHT** 488 lbs (221 kg)

WEIGHT STACKS 212 lbs (96 kg)

FFS-HAIT



Shasta Hip Adductor (Inner Thigh)

MATERIAL 11 Gauge Steel, Aluminum Collars, Rubber feet & Handles, Nylon Pulleys, Acrylic, Foam, PU Leather

PAINT COLOR Silver **VINYL COLOR** Black

STEEL TUBE SIZE 50 mm × 100 mm × 3 mm

LENGTH 72" (182.9 cm) **WIDTH** 26" (66 cm)

HEIGHT 56" (140 cm) **WEIGHT** 488 lbs (221 kg)

WEIGHT STACKS 212 lbs (96 kg)

FFT-LPSCR



Tahoe Seated Leg Press Sled / Calf Raise

MATERIAL:
Q235 Steel

WEIGHT:
568.8 lbs (258 kg)

LENGTH:
79.1" (201 cm)

WIDTH:
40.1" (102 cm)

HEIGHT:
71.2" (181 cm)

FFT-LPSCR



Shasta Seated Leg Press Sled / Calf Raise

MATERIAL:
Q235 Steel

WEIGHT:
965.6 lbs (438 kg)

LENGTH:
79.1" (201 cm)

WIDTH:
40.1" (102 cm)

HEIGHT:
71.2" (181 cm)

FFM-LPLR



Monster Lat Pulldown / Low Row

MATERIAL:
11 Gauge Steel, Aluminum Collars, Rubber feet & Handles, Nylon Pulleys, Acrylic, Foam, PU Leather

PAINT COLOR:
Black

VINYL COLOR:
Black

STEEL TUBE SIZE:
75 mm × 75 mm × 3 mm

WEIGHT:
568.8 lbs (258 kg)

WEIGHT STACKS:
300 lbs (136 KG)

LENGTH:
55.2" (140 cm)

WIDTH:
44.4" (112.8 cm)

HEIGHT:
93.7" (238 cm)

FFT-LPDLR



Tahoe Lat Pulldown / Low Row

MATERIAL 11 Gauge Steel, Aluminum Collars, Rubber feet & Handles, Nylon Pulleys, Acrylic, Foam, PU Leather

PAINT COLOR Black **VINYL COLOR** Black

STEEL TUBE SIZE 50 mm × 100 mm × 3 mm

LENGTH 82" (208.3 cm) **WIDTH** 33" (84 cm)

HEIGHT 89.25" (226.7 cm)

WEIGHT 252 lbs (114.3 kg)

WEIGHT STACKS 236 lbs (107.3 kg)

FFS-LPDLR



Shasta Lat Pulldown / Low Row

MATERIAL 11 Gauge Steel, Aluminum Collars, Rubber feet & Handles, Nylon Pulleys, Acrylic, Foam, PU Leather

PAINT COLOR Silver **VINYL COLOR** Black

STEEL TUBE SIZE 50 mm × 100 mm × 3 mm

LENGTH 82" (208.3 cm) **WIDTH** 33" (84 cm)

HEIGHT 89.25" (226.7 cm)

WEIGHT 252 lbs (114.3 kg)

WEIGHT STACKS 236 lbs (107.3 kg)



FFT-ACLB

Tahoe Abdominal Crunch / Lower Back

MATERIAL 11 Gauge Steel, Aluminum Collars, Rubber feet & Handles, Nylon Pulleys, Acrylic, Foam, PU Leather

PAINT COLOR Black **VINYL COLOR** Black

STEEL TUBE SIZE 50 mm × 100 mm × 3 mm

LENGTH 46" (117 cm) **WIDTH** 41" (102 cm)

HEIGHT 56" (140 cm) **WEIGHT** 408 lbs (185 kg)

WEIGHT STACKS 212 lbs (96 kg)



FFS-ACLB

Shasta Abdominal Crunch / Lower Back

MATERIAL 11 Gauge Steel, Aluminum Collars, Rubber feet & Handles, Nylon Pulleys, Acrylic, Foam, PU Leather

PAINT COLOR Silver **VINYL COLOR** Black

STEEL TUBE SIZE 50 mm × 100 mm × 3 mm

LENGTH 46" (117 cm) **WIDTH** 41" (102 cm)

HEIGHT 56" (140 cm) **WEIGHT** 408 lbs (185 kg)

WEIGHT STACKS 212 lbs (96 kg)



FFT-ACD

Tahoe Assisted Chin Dip

MATERIAL 11 Gauge Steel, Aluminum Collars, Rubber feet & Handles, Nylon Pulleys, Acrylic, Foam, PU Leather

PAINT COLOR Black **VINYL COLOR** Black

STEEL TUBE SIZE 50 mm × 100 mm × 3 mm

LENGTH 47" (118 cm) **WIDTH** 45" (113 cm)

HEIGHT 87" (220 cm) **WEIGHT** 529 lb (240 kg)

WEIGHT STACKS 212 lb (96 kg)



FFS-ACD

Shasta Assisted Chin Dip

MATERIAL 11 Gauge Steel, Aluminum Collars, Rubber feet & Handles, Nylon Pulleys, Acrylic, Foam, PU Leather

PAINT COLOR Silver **VINYL COLOR** Black

STEEL TUBE SIZE 50 mm × 100 mm × 3 mm

LENGTH 47" (118 cm) **WIDTH** 45" (113 cm)

HEIGHT 87" (220 cm) **WEIGHT** 529 lb (240 kg)

WEIGHT STACKS 212 lb (96 kg)

FFT-CSMP



Tahoe Chest/Shoulder Multi Press

MATERIAL 11 Gauge Steel, Aluminum Collars, Rubber feet & Handles, Nylon Pulleys, Acrylic, Foam, PU Leather

PAINT COLOR Black **VINYL COLOR** Black

STEEL TUBE SIZE 50 mm × 100 mm × 3 mm

LENGTH 80" (203.2 cm) **WIDTH** 55.5" (141 cm)

HEIGHT 64.25" (163.2 cm)

WEIGHT 476 lb (216 kg)

WEIGHT STACKS 212 lbs (96 kg)

FFS-CSMP



Shasta Chest/Shoulder Multi Press

MATERIAL 11 Gauge Steel, Aluminum Collars, Rubber feet & Handles, Nylon Pulleys, Acrylic, Foam, PU Leather

PAINT COLOR Silver **VINYL COLOR** Black

STEEL TUBE SIZE 50 mm × 100 mm × 3 mm

LENGTH 80" (203.2 cm) **WIDTH** 55.5" (141 cm)

HEIGHT 64.25" (163.2 cm)

WEIGHT 476 lb (216 kg)

WEIGHT STACKS 212 lbs (96 kg)

FFT-PFRD



Tahoe Pec Fly / Rear Delt

MATERIAL:
11 Gauge Steel, Aluminum Collars, Rubber feet & Handles, Nylon Pulleys, Acrylic, Foam, PU Leather

PAINT COLOR:
Black

VINYL COLOR:
Black

STEEL TUBE SIZE:
50 mm × 100 mm × 3 mm

WEIGHT:
580 lb (263 kg)

WEIGHT STACKS:
212 lb (96 kg)

DEPTH:
40.5" (89.3 cm)

WIDTH:
33" (72.8 cm)

HEIGHT:
79" (174.2 cm)

FFT-DBCT



Tahoe Dual Bicep Curl / Tricep

MATERIAL 11 Gauge Steel, Aluminum Collars, Rubber feet & Handles, Nylon Pulleys, Acrylic, Foam, PU Leather

PAINT COLOR Black **VINYL COLOR** Black

STEEL TUBE SIZE 50 mm × 100 mm × 3 mm

LENGTH 45" (1140 cm) **WIDTH** 41" (104 cm)

HEIGHT 56" (140 cm) **WEIGHT** 396 lb (180 kg)

WEIGHT STACKS 212 lb (96 kg)

FFS-DBCT



Shasta Dual Bicep Curl / Tricep

MATERIAL 11 Gauge Steel, Aluminum Collars, Rubber feet & Handles, Nylon Pulleys, Acrylic, Foam, PU Leather

PAINT COLOR Silver **VINYL COLOR** Black

STEEL TUBE SIZE 50 mm × 100 mm × 3 mm

LENGTH 45" (1140 cm) **WIDTH** 41" (104 cm)

HEIGHT 56" (140 cm) **WEIGHT** 396 lb (180 kg)

WEIGHT STACKS 212 lb (96 kg)

FFT-HAA



Tahoe Hip Abduction / Adduction

MATERIAL 11 Gauge Steel, Aluminum Collars, Rubber feet & Handles, Nylon Pulleys, Acrylic, Foam, PU Leather

PAINT COLOR Black **VINYL COLOR** Black

STEEL TUBE SIZE 50 mm × 100 mm × 3 mm

LENGTH 67" (170.2 cm) **WIDTH** 26" (66 cm)

HEIGHT 56" (142.2 cm) **WEIGHT** 488 lb (221 kg)

WEIGHT STACKS 212 lbs (96 kg)

FFS-HAA



Shasta Inner / Outer Thigh Machine

MATERIAL 11 Gauge Steel, Aluminum Collars, Rubber feet & Handles, Nylon Pulleys, Acrylic, Foam, PU Leather

PAINT COLOR Silver **VINYL COLOR** Black

STEEL TUBE SIZE 50 mm × 100 mm × 3 mm

LENGTH 67" (170.2 cm) **WIDTH** 26" (66 cm)

HEIGHT 56" (142.2 cm) **WEIGHT** 488 lb (221 kg)

WEIGHT STACKS 212 lbs (96 kg)



FFT-MHG

Tahoe Multi Hip and Glute

MATERIAL 11 Gauge Steel, Aluminum Collars, Rubber feet & Handles, Nylon Pulleys, Acrylic, Foam, PU Leather

PAINT COLOR Black **VINYL COLOR** Black

STEEL TUBE SIZE 50 mm × 100 mm × 3 mm

LENGTH 65" (165 cm) **WIDTH** 39" (99 cm)

HEIGHT 72" (183 cm) **WEIGHT** 515 lb (234 kg)

WEIGHT STACKS 212 lb (96 kg)



FFS-MHG

Shasta Multi Hip and Glute

MATERIAL 11 Gauge Steel, Aluminum Collars, Rubber feet & Handles, Nylon Pulleys, Acrylic, Foam, PU Leather

PAINT COLOR Silver **VINYL COLOR** Black

STEEL TUBE SIZE 50 mm × 100 mm × 3 mm

LENGTH 65" (165 cm) **WIDTH** 39" (99 cm)

HEIGHT 72" (183 cm) **WEIGHT** 515 lb (234 kg)

WEIGHT STACKS 212 lb (96 kg)



FFS-SLCLE

Shasta Seated Leg Curl / Leg Extension

MATERIAL 11 Gauge Steel, Aluminum Collars, Rubber feet & Handles, Nylon Pulleys, Acrylic, Foam, PU Leather

PAINT COLOR Silver **VINYL COLOR** Black

STEEL TUBE SIZE 50 mm × 100 mm × 3 mm

LENGTH 47" (119.4 cm) **WIDTH** 41" (104.1 cm)

HEIGHT 64" (162.6 cm) **WEIGHT** 516 lb (234 kg)

WEIGHT STACKS 212 lbs (96 kg)



FFT-SLCLE

Tahoe Seated Leg Curl / Leg Extension

MATERIAL 11 Gauge Steel, Aluminum Collars, Rubber feet & Handles, Nylon Pulleys, Acrylic, Foam, PU Leather

PAINT COLOR Black **VINYL COLOR** Black

STEEL TUBE SIZE 50 mm × 100 mm × 3 mm

LENGTH 47" (119.4 cm) **WIDTH** 41" (104.1 cm)

HEIGHT 64" (162.6 cm) **WEIGHT** 516 lb (234 kg)

WEIGHT STACKS 212 lbs (96 kg)

FFT-PLCLE



Tahoe Prone Leg Curl / Leg Extension

MATERIAL:
11 Gauge Steel, Aluminum Collars, Rubber feet & Handles, Nylon Pulleys, Acrylic, Foam, PU Leather

PAINT COLOR:
Black

VINYL COLOR:
Black

STEEL TUBE SIZE:
50 mm × 100 mm × 3 mm

WEIGHT:
507 lb (230 kg)

WEIGHT STACKS:
212 lbs (96 kg)

LENGTH:
65" (165 cm)

WIDTH:
39" (99 cm)

HEIGHT:
56" (140 cm)

FFS-PLCLE



Shasta Prone Leg Curl / Leg Extension

MATERIAL:
11 Gauge Steel, Aluminum Collars, Rubber feet & Handles, Nylon Pulleys, Acrylic, Foam, PU Leather

PAINT COLOR:
Silver

VINYL COLOR:
Black

STEEL TUBE SIZE:
50 mm × 100 mm × 3 mm

WEIGHT:
507 lb (230 kg)

WEIGHT STACKS:
212 lbs (96 kg)

LENGTH:
65" (165 cm)

WIDTH:
39" (99 cm)

HEIGHT:
56" (140 cm)

FFB-360XL



Black 360XL Energy Group Training System

WEIGHT STACK:
176 lb (80kg) × 2

LENGTH:
218.8" (555.7 cm)

MATERIAL:
11 Gauge Steel

WIDTH:
173.8" (441.4 cm)

COLOR:
Black

HEIGHT:
101.4" (257.5 cm)

WEIGHT:
2903 lb (1317kg)

TUBE SIZE:
50 mm × 100 mm × 3 mm
Flat Steel Tube

FFS-360XL



Silver 360XL Energy Group Training System

WEIGHT STACK:
176 lb (80kg) × 2

LENGTH:
218.8" (555.7 cm)

MATERIAL:
11 Gauge Steel

WIDTH:
173.8" (441.4 cm)

COLOR:
Silver

HEIGHT:
101.4" (257.5 cm)

WEIGHT:
2903 lb (1317kg)

TUBE SIZE:
50 mm × 100 mm × 3 mm
Flat Steel Tube

FFS-360T



Silver 360T Energy Group Training System

WEIGHT STACK:
176 lb (80kg) × 2

LENGTH:
74" (187.9cm)

MATERIAL:
11 Gauge Steel

WIDTH:
138.8" (352.5cm)

COLOR:
Silver

HEIGHT:
96.8" (245.9cm)

WEIGHT:
992 lb (450kg)

TUBE SIZE:
50 mm × 100 mm × 3 mm
Flat Elliptical Tube

FFS-360XS



Silver 360XS Energy Group Training System

WEIGHT STACK:
176 lb (80kg)

MATERIAL:
11 Gauge Steel

COLOR:
Silver

WEIGHT:
1433 lb (650kg)

LENGTH:
120.2" (305.3 cm)

WIDTH:
137.5" (349.2 cm)

HEIGHT:
95.3" (242 cm)

TUBE SIZE:
50 mm × 100 mm × 3 mm
Flat Steel Tube

FF-FTS-F1



Functional Training System

WEIGHT STACK:
165 lb (75 kg) × 2

MATERIAL:
Steel

COLOR:
Black

WEIGHT:
881.8 lb (400 kg)

DEPTH:
45" (114.3 cm)

WIDTH:
72" (229.9 cm)

HEIGHT:
90.5 (229.9 cm)

FF-WMDCCC

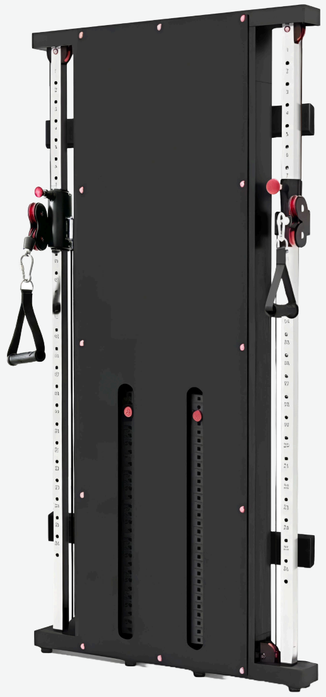

Wall Mounted Dual Cable Column Component

DEPTH:
5" Frame (9" Deep w/Cables) (12.7cm (22.8cm Deep w/ Cables))

WIDTH:
48.5" (123.2 cm)

HEIGHT:
84" (213.3 cm)

WEIGHT STACK:
165 lb (75 kg) × 2

MATERIAL:
Steel

COLOR:
Black

FF-WMMFT



Wall Mounted Mirror Functional Trainer

DEPTH:
5" Frame (9" Deep w/Cables) (12.7cm (22.8cm Deep w/ Cables))

WIDTH:
48.5" (123.2 cm)

HEIGHT:
84" (213.3 cm)

WEIGHT STACK:
165 lb (75 kg) × 2

MATERIAL:
Steel

COLOR:
Mirror

FFA-DCC



Aspen Dual Cable Cross – Black

DEPTH:
51.7 (131.3 cm With arms folded), 57.1" (145cm with arms fully extended)

WIDTH:
56.8" at feet (144cm With arms folded), 115.8" (294cm with arms fully extended)

HEIGHT:
74.4" (188.9cm Base & Height w/Arms Folded), 84.4" (214.3cm with arms fully extended)

WEIGHT STACK:
198 lb (90 kg) × 2

MATERIAL:
Steel

COLOR:
Black

FFP-DCC



Phoenix Dual Cable Cross – Silver

DEPTH:
51.7 (131.3 cm With arms folded), 57.1" (145cm with arms fully extended)

WIDTH:
56.8" at feet (144cm With arms folded), 115.8" (294cm with arms fully extended)

HEIGHT:
74.4" (188.9cm Base & Height w/Arms Folded), 84.4" (214.3cm with arms fully extended)

WEIGHT STACK:
198 lb (90 kg) × 2

MATERIAL:
Steel

COLOR:
Silver

FF-DAP50

Dual Adjustable Pulley – 83" Tall

WEIGHT STACK:
198 lb (90 kg) × 2

MATERIAL:
12 Gauge Steel

COLOR:
Black

WEIGHT:
646 lbs (283 kg)

DEPTH:
40.9" (103.8 cm)

WIDTH:
62.2" (157.9 cm)

HEIGHT:
82.6" (209.8 cm)

TUBE SIZE:
40 × 80 × 2.5mm rectangular steel tube

FF-WMMFT

Dual Stack Cable Cross

WEIGHT STACK:
160 lb (72.7 kg) × 2

MATERIAL:
Steel

COLOR:
Black

WEIGHT:
739 lb (335 kg)

DEPTH:
43" (109.2 cm)

WIDTH:
133" (337.8 cm)

HEIGHT:
90" (228.6 cm)

FFB-ACC



Black Adjustable Cable Crossover

WEIGHT STACK:
Standard: 220 lb (100 kg) × 2
Optional: 265 lb (120 kg) × 2

MATERIAL:
11 Gauge Steel

COLOR:
Black

WEIGHT:
882 lb (400 kg)

LENGTH:
30" (76.2 cm)

WIDTH:
167" (424.1 cm)

HEIGHT:
91" (231.1 cm)

TUBE SIZE:
65 × 114 × 3 mm Flat oval steel tube

FFS-ACC



Silver Adjustable Cable Crossover

WEIGHT STACK:
Standard: 220 lb (100 kg) × 2
Optional: 265 lb (120 kg) × 2

MATERIAL:
11 Gauge Steel

COLOR:
Silver

WEIGHT:
882 lb (400 kg)

LENGTH:
30" (76.2 cm)

WIDTH:
167" (424.1 cm)

HEIGHT:
91" (231.1 cm)

TUBE SIZE:
65 × 114 × 3 mm Flat oval steel tube

FFS-DAP



Silver Dual Adjustable Pulley

WEIGHT STACK:
Standard: 220 lb (100 kg) × 2
Optional: 324 lb (147 kg) × 2

MATERIAL:
11 Gauge Steel

COLOR:
Silver

WEIGHT:
670 lbs (304 kg)

DEPTH:
44" (112 cm)

WIDTH:
62" (157 cm)

HEIGHT:
93.15" (236.6 cm)

TUBE SIZE:
65 × 114 × 3 mm Flat oval steel tube

FFB-DAP



Silver Dual Adjustable Pulley

WEIGHT STACK:
Standard: 220 lb (100 kg) × 2
Optional: 324 lb (147 kg) × 2

MATERIAL:
11 Gauge Steel

COLOR:
Black

WEIGHT:
670 lbs (304 kg)

DEPTH:
44" (112 cm)

WIDTH:
62" (157 cm)

HEIGHT:
93.15" (236.6 cm)

TUBE SIZE:
65 × 114 × 3 mm Flat oval steel tube

FFNS-DCC



Newport Dual Cable Cross

ARMS FOLDED:
50.1"D (fully extended) × 67.4"W × 71.4"H (127.2cm × 171.2cm × 181.3cm)

ARMS FULLY EXTENDED:
50.1"D (fully extended) × 121.6"W × 98.4"H (127.2cm × 308.8cm × 249.9cm)

TUBE SIZE:
50mm × 150mm × 2.5mm rectangle tube

WEIGHT STACK:
198 lbs (90 kg) × 2

MATERIAL:
12 Gauge Steel

COLOR:
Black

WEIGHT:
728 lbs (330 kg)

FFV-DCC



Venice Dual Cable Cross

ARMS FOLDED:
50.1"D (fully extended) × 67.4"W × 71.4"H (127.2cm × 171.2cm × 181.3cm)

ARMS FULLY EXTENDED:
50.1"D (fully extended) × 121.6"W × 98.4"H (127.2cm × 308.8cm × 249.9cm)

TUBE SIZE:
50mm × 150mm × 2.5mm rectangle tube

WEIGHT STACK:
198 lbs (90 kg) × 2

MATERIAL:
12 Gauge Steel

COLOR:
Silver

WEIGHT:
728 lbs (330 kg)

FF-DPWMCC

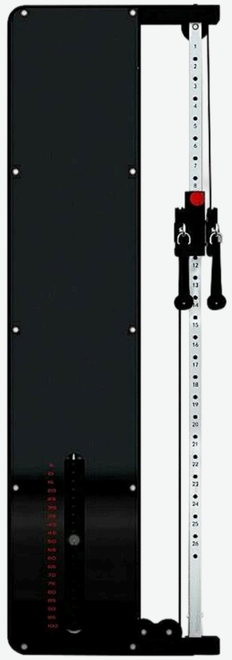

Dual Pulley Wall Mounted Cable Column

WEIGHT STACK:
133 lbs (60 kgs)

MATERIAL:
Steel

COLOR:
Black

WEIGHT:
331 lbs (150 kgs)

LENGTH:
31" (78.7 cm)

WIDTH:
5" (12.7 cm)

HEIGHT:
85" (215.9 cm)

FFB-CC



Black Cable Column

WEIGHT STACK:
235 lb (106.8 kg)

MATERIAL:
Steel

COLOR:
Black

WEIGHT:
685lb (311kg)

LENGTH:
55" (233.7 cm)

WIDTH:
57" (144.8 cm)

HEIGHT:
92" (233.7cm)

FFS-CC



Silver Cable Column

WEIGHT STACK:
235 lb (106.8 kg)

MATERIAL:
Steel

COLOR:
Silver

WEIGHT:
685lb (311kg)

LENGTH:
55" (233.7 cm)

WIDTH:
57" (144.8 cm)

HEIGHT:
92" (233.7cm)

FRENCH FITNESS

08
GYM SYSTEMS

FF-X4-Black



Functional Gym System w/Leg Press - Black

WEIGHT STACKS:
198 lbs

DEPTH:
82" (208.3 cm)

WIDE:
91" (231.1cm)

HEIGHT:
83.9" (213.1cm)

MATERIAL:
14 Gauge Steel

PAINT COLOR:
Black

VINYL COLOR:
Black

STEEL TUBE SIZE:
50mm × 70mm × 2mm

FF-X4



Functional Gym System w/Leg Press - Silver

WEIGHT STACKS:
198 lbs

DEPTH:
82" (208.3 cm)

WIDE:
91" (231.1cm)

HEIGHT:
83.9" (213.1cm)

MATERIAL:
14 Gauge Steel

PAINT COLOR:
Silver

VINYL COLOR:
Black

STEEL TUBE SIZE:
50mm × 70mm × 2mm

FF-X5



Station Multi Gym System V2

WEIGHT STACKS:
165 lbs (75 kg)

DEPTH:
87" (220.9 cm)

WIDTH:
101.5" (257.8 cm)

HEIGHT:
82.75" (210.2 cm)

WEIGHT:
568.7 lbs (258 kg)

MATERIAL:
Thick 2.0 mm steel frame

PAINT COLOR:
Black

VINYL COLOR:
Black

FF-X8



Multi Station Gym System

WEIGHT STACKS:
Standard: 165 lbs (74.8 kg)
Optional: 265 lbs (120.2 kg)

STEEL TUBE SIZE:
50 mm × 70 mm × 2 mm
50 mm × 50 mm × 2 mm
50 mm × 70 mm × 2.5 mm

PAINT COLOR:
Black/Red

VINYL COLOR:
Black

MATERIAL:
12 and 14 Gauge Steel

LENGTH:
85" (215.9 cm)

WIDTH:
54" (137.1 cm)

HEIGHT:
84" (213.3 cm)

FF-X8-BLACK



Multi Station Gym System – Black

WEIGHT STACKS:
Standard: 165 lbs (74.8 kg)
Optional: 265 lbs (120.2 kg)

STEEL TUBE SIZE:
50 mm × 70 mm × 2 mm
50 mm × 50 mm × 2 mm
50 mm × 70 mm × 2.5 mm

PAINT COLOR:
Black

VINYL COLOR:
Black

MATERIAL:
12 and 14 Gauge Steel

LENGTH:
85" (215.9 cm)

WIDTH:
54" (137.1 cm)

HEIGHT:
84" (213.3 cm)

FF-X10



Functional Gym System

MATERIAL:
Steel

WEIGHT STACKS:
185 lbs (84 kg)

PAINT COLOR:
Black

VINYL COLOR:
Black

LENGTH:
67.2" (170.7 cm)

WIDTH:
45.4" (115.3 cm)

HEIGHT:
83" (210.8 cm)

FF-X8XL-BLACK



Multi Station Gym System – Black

WEIGHT STACKS:
Standard: 165 lbs (74.8 kg) x 2
Optional: 265 lbs (120.2 kg) x 2

DEPTH:
92" (233.7cm)

WIDE:
111" (281.9cm)

HEIGHT:
84" (213.3cm without the Ab Bench and Pull Up Bar)

MATERIAL:
12 and 14 Gauge Steel

PAINT COLOR:
Black

VINYL COLOR:
Black

STEEL TUBE SIZE:
50 mm × 70 mm × 2 mm,
50 mm × 50 mm × 2 mm,
50 mm × 70 mm × 2.5 mm

FF-X8XL



Multi Station Gym System, Red/Black

WEIGHT STACKS:
Standard: 165 lbs (74.8 kg) x 2
Optional: 265 lbs (120.2 kg) x 2

DEPTH:
92" (233.7cm)

WIDE:
111" (281.9cm)

HEIGHT:
84" (213.3cm without the Ab Bench and Pull Up Bar)

MATERIAL:
12 and 14 Gauge Steel

PAINT COLOR:
Black/Red

VINYL COLOR:
Black

STEEL TUBE SIZE:
50 mm × 70 mm × 2 mm,
50 mm × 50 mm × 2 mm,
50 mm × 70 mm × 2.5 mm

FFB-4SMJG



Black 4 Stack Multi Jungle Gym

WEIGHT STACKS:
(1) Lat Pulldown: 264 Lbs (119.7 kg)
(1) Low row: 264 lbs (119.7 kg)
(1)Adjustable pulleys: 198 lbs (89.8 kg)
(1) Tricep: 198 lbs (89.8 kg)

LENGTH:
143" (363.2 cm)

WIDTH:
92" (233.7 cm)

HEIGHT:
94.25" (239.4 cm)

MATERIAL:
11 Gauge Steel and ASTM A36 steel frame

PAINT COLOR:
Black

VINYL COLOR:
Black

STEEL TUBE SIZE:
65 mm × 114 mm × 3 mm
Flat oval steel tube

WEIGHT:
793 lbs (360 KG)

FFS-4SMJG



Silver 4 Stack Multi Jungle Gym

WEIGHT STACKS:
(1) Lat Pulldown: 264 Lbs (119.7 kg)
(1) Low row: 264 lbs (119.7 kg)
(1)Adjustable pulleys: 198 lbs (89.8 kg)
(1) Tricep: 198 lbs (89.8 kg)

LENGTH:
143" (363.2 cm)

WIDTH:
92" (233.7 cm)

HEIGHT:
94.25" (239.4 cm)

MATERIAL:
11 Gauge Steel and ASTM A36 steel frame

PAINT COLOR:
Silver

VINYL COLOR:
Black

STEEL TUBE SIZE:
65 mm × 114 mm × 3 mm
Flat oval steel tube

WEIGHT:
793 lbs (360 KG)

FFB-5SMJG



Black 5 Stack Multi Jungle Gym

WEIGHT STACKS:
(1) Lat Pulldown: 264 Lbs (119.7 kg)
(1) Low row: 264 lbs (119.7 kg)
(2)Adjustable pulleys: 198 lbs (89.8 kg)
(1) Tricep: 198 lbs (89.8 kg)

LENGTH:
143" (363.2 cm)

WIDTH:
92" (233.7 cm)

HEIGHT:
94.25" (239.4 cm)

MATERIAL:
11 Gauge Steel and ASTM A36 steel frame

PAINT COLOR:
Black

VINYL COLOR:
Black

STEEL TUBE SIZE:
65 mm × 114 mm × 3 mm
Flat oval steel tube

WEIGHT:
2068 lbs (938 kg)

FFS-5SMJG



Silver 5 Stack Multi Jungle Gym

WEIGHT STACKS:
(1) Lat Pulldown: 264 Lbs (119.7 kg)
(1) Low row: 264 lbs (119.7 kg)
(2)Adjustable pulleys: 198 lbs (89.8 kg)
(1) Tricep: 198 lbs (89.8 kg)

LENGTH:
143" (363.2 cm)

WIDTH:
92" (233.7 cm)

HEIGHT:
94.25" (239.4 cm)

MATERIAL:
11 Gauge Steel and ASTM A36 steel frame

PAINT COLOR:
Silver

VINYL COLOR:
Black

STEEL TUBE SIZE:
65 mm × 114 mm × 3 mm Flat oval steel tube

WEIGHT:
2068 lbs (938 kg)

FFB-8SMJG



Black 8 Stack Multi Jungle Gym

WEIGHT STACKS:
(2) Lat Pulldown: 264 Lbs (119.7 kg)
(2) Low row: 264 lbs (119.7 kg)
(2)Adjustable pulleys: 198 lbs (89.8 kg)
(2) Tricep: 198 lbs (89.8 kg)

LENGTH:
224" (568.9 cm)

WIDTH:
149" (378.4 cm)

HEIGHT:
95" (241.3 cm)

MATERIAL:
11 Gauge Steel and ASTM A36 steel frame

PAINT COLOR:
Black

VINYL COLOR:
Black

STEEL TUBE SIZE:
65 mm × 114 mm × 2.5 mm Steel tube

FFS-8SMJG



Silver 8 Stack Multi Jungle Gym

WEIGHT STACKS:
(2) Lat Pulldown: 264 Lbs (119.7 kg)
(2) Low row: 264 lbs (119.7 kg)
(2)Adjustable pulleys: 198 lbs (89.8 kg)
(2) Tricep: 198 lbs (89.8 kg)

LENGTH:
224" (568.9 cm)

WIDTH:
149" (378.4 cm)

HEIGHT:
95" (241.3 cm)

MATERIAL:
11 Gauge Steel and ASTM A36 steel frame

PAINT COLOR:
Silver

VINYL COLOR:
Black

STEEL TUBE SIZE:
65 mm × 114 mm × 2.5 mm Steel tube

FF-X2-Black



Corner Home Gym System – Black

WEIGHT STACKS:
150 lbs (68 kg) x 2

LENGTH:
91"L (Leg Press Side) (231.1 cm)

WIDE:
83" (Bench / Leg Ext Side) (210.8 cm)

HEIGHT:
81" (205.7cm)

WEIGHT:
582 lbs (264 kg)

MATERIAL:
14 and 16 Gauge Steel

PAINT COLOR:
Black

VINYL COLOR:
Black

STEEL TUBE SIZE:
45mm × 45mm × 2mm and 45mm × 45mm × 1.5mm

FF-X2



Corner Home Gym System – Silver

WEIGHT STACKS:
150 lbs (68 kg) x 2

LENGTH:
91"L (Leg Press Side) (231.1 cm)

WIDE:
83" (Bench / Leg Ext Side) (210.8 cm)

HEIGHT:
81" (205.7cm)

WEIGHT:
582 lbs (264 kg)

MATERIAL:
14 and 16 Gauge Steel

PAINT COLOR:
Silver

VINYL COLOR:
Black

STEEL TUBE SIZE:
45mm × 45mm × 2mm and 45mm × 45mm × 1.5mm

FF-X12



Station Functional Trainer & Home Gym System

WEIGHT STACKS:
200 lbs (90kg) x 2

DEPTH:
122" (309.9 cm)

WIDTH:
96"W (243.8 cm)

HEIGHT:
83.4" (211.8 cm)

WEIGHT:
661 lbs (300 kg)

MATERIAL:
Steel

PAINT COLOR:
Black/Red

VINYL COLOR:
Black

FF-X20



X20 4 Station Functional Trainer & Home Gym System

DEPTH:
133.85" (340 cm)

WIDTH:
98.42" (250 cm)

HEIGHT:
86.61" (220 cm)

WEIGHT:
1256.63 lbs (570 kg)

MATERIAL:
Steel

FFB-PR



Black Pilates Reformer

MATERIAL:
-Made with Aluminum Alloy
-Wear-resistant microfiber leather
-High density EVA Foam

DIMENSIONS:
Frame Size: 93.3"L x 25"W x 13"H
Frame Size (inc. foot bar): 94"L x 26.8"W x 13"H
Sitting Box Size: 27.5"L x 15.7"W x 19.4"H
Carriage Size: 38.2"L x 23.8"W (with pillow)

WEIGHT:
165 lbs (75 kg)

MAX USER WEIGHT:
330 lbs (150 kg)

FRENCH FITNESS

09 CARDIO

FFB-AET50 FFS-AET50



Arc Elliptical Trainer

LENGTH: 72.5" (184.2 cm)
WIDTH: 38.2" (97 cm)
HEIGHT: 65.5" (166.4 cm)
MAX USER WEIGHT: 330 lbs (150 kg)
CONSOLE: LED
WEIGHT: 366 lbs (166 kg)
COLOR: Black, Silver
POWER REQUIREMENTS: 110V

FF-E200



Commercial Elliptical

LENGTH: 80" (203.2 cm)
WIDTH: 26"W (66 cm)
HEIGHT: 69" (175.2 cm)
MAX USER WEIGHT: 440 lbs (200 kg)
CONSOLE: LED
WEIGHT: 253 lbs (115 kg)
COLOR: Black
POWER REQUIREMENTS: Self-generating

FF-E500



E500 Elliptical

CONSOLE LCD
LENGTH 85.8" (218 cm)
WIDTH 29.5" (75 cm)
HEIGHT 63.3" (160.7 cm)
WEIGHT 319.6 lbs (145 kg)
POWER REQUIREMENTS Self-generating
COLOR Black/Silver

FF-ABM40



Air Bike Machine w/Air Resistance

CONSOLE LED
LENGTH 47.2" (119.9 cm)
WIDTH 24" (60.9 cm)
HEIGHT 39.3" (99.8 cm)
WEIGHT 75 lbs (34 kg)
MAX USER WEIGHT 330.6 lbs (150 kg)
POWER REQUIREMENTS 110V
COLOR Black

FF-AFB



Air Fan Bike

CONSOLE: LCD
LENGTH: 51" (129.5 cm)
WIDTH: 23" (58.4 cm)
HEIGHT: 48" (121.9cm)
MAX USER WEIGHT: 330 lbs (150 kg)
COLOR: Black

FF-MIC20



Indoor Cycle w/LED Console

CONSOLE LED **LENGTH** 43.3" (110 cm)
WIDTH 24.4"W (62cm) **HEIGHT** 48.8" (124cm)
WEIGHT 125.7 lbs (57 kg)
MAX USER WEIGHT 330 lbs (150 kg)
POWER REQUIREMENTS 220V **COLOR** Black

FF-MIC30T



Indoor Cycle w/21.5" Touch Consol

CONSOLE LCD **LENGTH** 43.3" (110 cm)
WIDTH 24.4" (62 cm) **HEIGHT** 48.8" (124cm)
WEIGHT 125.7 lbs (57 kg)
MAX USER WEIGHT 330 lbs (150 kg)
POWER REQUIREMENTS 110V
COLOR Black/Silver

FF-MIC3



Magnetic Commercial Indoor Cycle

CONSOLE LCD **LENGTH** 55.1" (139.9 cm)
WIDTH 22" (55.9 cm) **HEIGHT** 51.1" (129.8 cm)
WEIGHT 116.8lb (53 kg)
POWER REQUIREMENTS Self-generating **COLOR** Black

FF-MIC4



Magnetic Indoor Commercial Cycle

CONSOLE LED **LENGTH** 50" (127 cm) **WIDTH** 21" (53cm)
HEIGHT 51" (130cm) **WEIGHT** 112 lbs (51 kg)
MAX USER WEIGHT 350 lbs (159 kg)
POWER REQUIREMENTS Self-generating **COLOR** Silver

FF-UB200



Commercial Upright Bike

CONSOLE LED **LENGTH** 47.75" (121.3 cm)
WIDTH 23.13" (58.7 cm) **HEIGHT** 59" (149.8 cm)
WEIGHT 137.5lb (62.4 kg)
MAX USER WEIGHT 440lb (200 kg)
POWER REQUIREMENTS Self-generating **COLOR** Black

FF-UB400



Commercial Upright Bike w/LED Console

CONSOLE LED **POWER REQUIREMENTS** 110V
LENGTH 47.24" (120 cm) **WIDTH** 19.68" (50 cm)
HEIGHT 57.08" (145 cm) **WEIGHT** 165.35 lbs (75 kg)
MAX USER WEIGHT 330 lbs (150 kg)

FF-MIC4



Commercial Upright Bike

CONSOLE LED **LENGTH** 44.3" (112.5 cm)
WIDTH 20.7" (52.5 cm) **HEIGHT** 61.6" (156.5 cm)
WEIGHT 137.8 lb (62.5 kg)
MAX USER WEIGHT 330 lb (150 kg)
POWER REQUIREMENTS Self-generating **COLOR** Silver

FF-UB420T



Commercial Upright Bike w/10" Touch Console

LENGTH:
47.24" (120 cm)

CONSOLE:
10" TFT Touch Screen

MAX USER WEIGHT:
330 lbs (150 kg)

WIDTH:
19.68" (50 cm)

COLOR:
Black

POWER REQUIREMENTS:
110V

HEIGHT:
57.08" (145 cm)

WEIGHT:
165.35 lbs (75 kg)

FF-RB200



Commercial Recumbent Bike

LENGTH:
79.9" (202.9 cm)

WIDTH:
25.9" (65.8 cm)

HEIGHT:
68.8" (174.7cm)

CONSOLE:
LED

COLOR:
Black

WEIGHT:
229.2lb (104 kg)

MAX USER WEIGHT:
350lb (159 kg)

POWER REQUIREMENTS:
Self-generating

FF-RB500



Commercial Recumbent Bike

LENGTH:
42.3" (107.5 cm)

WIDTH:
23" (58.5 cm)

HEIGHT:
53.9" (137 cm)

CONSOLE:
LED

COLOR:
Silver

WEIGHT:
169.75 lb (77 kg)

MAX USER WEIGHT:
350lb (159 kg)

POWER REQUIREMENTS:
Self-generating

FF-SE400



SE400 Recumbent Seated Elliptical w/LED Console

LENGTH:
80" (203 cm)

WIDTH:
39.8" (101 cm)

HEIGHT:
59.8" (152 cm)

WEIGHT:
396.8 lbs (180 kg)

MAX USER WEIGHT:
330 lbs (150 kg)

USER HEIGHT RANGE:
5'6" to 8'3" (140cm to 120cm)

MAIN TUBE SIZE:
2.4" x 4.7" (60mm x 120mm)

MAIN TUBE THICKNESS:
3mm

FF-SE420T



SE420T Recumbent Seated Elliptical w/10" Touch Console

LENGTH:
80" (203 cm)

WIDTH:
39.8" (101 cm)

HEIGHT:
59.8" (152 cm)

WEIGHT:
396.8 lbs (180 kg)

MAX USER WEIGHT:
330 lbs (150 kg)

USER HEIGHT RANGE:
5'6" to 8'3" (140cm to 120cm)

MAIN TUBE SIZE:
2.4" x 4.7" (60mm x 120mm)

MAIN TUBE THICKNESS:
3mm

FF-TBE200



Total Body Ergometer

CONSOLE LCD
LENGTH 59" (150 cm)
WIDTH 25.98" (66 cm)
HEIGHT 48.8" (124 cm)
WEIGHT 153.22 lbs (69.5 kg)
MAX USER WEIGHT 330 lbs (150 kg)
POWER REQUIREMENTS Self-generating
COLOR Silver

FF-UBE100



Upper Body Ergometer Arm Bike

CONSOLE LCD
LENGTH 59" (150 cm)
WIDTH 25.2" (64 cm)
HEIGHT 51.2" (130 cm)
WEIGHT 162.04 lbs (70.2 kg)
MAX USER WEIGHT 330 lbs (150 kg)
POWER REQUIREMENTS Self-generating
COLOR Black

FFB-SM200



Black Stairmill

CONSOLE LCD **LENGTH** 57" (1450 mm)
WIDTH 34.6" (880 mm) **HEIGHT** 84.2" (2140 mm)
WEIGHT 452 lbs (205 kg)
MAX USER WEIGHT 440lbs (200 kg) **COLOR** Black
POWER REQUIREMENTS Standard 110-120V and 220-110V, 3 Prong Outlet, 240V: Works on both with the same plug

FFS-SM200



Silver Stairmill

CONSOLE LCD **LENGTH** 57" (1450 mm)
WIDTH 34.6" (880 mm) **HEIGHT** 84.2" (2140 mm)
WEIGHT 452 lbs (205 kg)
MAX USER WEIGHT 440lbs (200 kg) **COLOR** Silver
POWER REQUIREMENTS Standard 110-120V and 220-110V, 3 Prong Outlet, 240V: Works on both with the same plug

FF-SC500



Climber Stepper

CONSOLE LCD **LENGTH** 49.2" (?? cm)
WIDTH 29.9" (?? cm) **HEIGHT** 62.9" (?? cm)
WEIGHT 148.5 lbs (67.4 kg)
MAX USER WEIGHT 220 lbs (100 kg) **COLOR** Black
POWER REQUIREMENTS Self-generating



FF-SC600

Stair Climber Stepper

CONSOLE LCD **LENGTH** 51.2" (130 cm)
WIDTH 37.4" (95 cm) **HEIGHT** 73.2" (186 cm)
WEIGHT 171.9 lbs (78 kg)
MAX USER WEIGHT 330 lbs (150 kg)
POWER REQUIREMENTS Self-generating w/ Power Adaptor: 100-240V 50-60Hz / 18V 2A
COLOR Dark Gray



FF-VC200

Vertical Climbing Machine

CONSOLE LED **LENGTH** 41.4" (105.1 cm)
WIDTH 43.3" (110 cm) **HEIGHT** 98.4" (250 cm)
WEIGHT 210 lbs (95 kg)
MAX USER WEIGHT 264 lbs (120 kg)
POWER REQUIREMENTS 220V **COLOR** Black



FF-FT300

Folding Treadmill

CONSOLE LED

LENGTH 74.8" (190 cm)

WIDTH 35.8" (91 cm)

HEIGHT 58.6" (149 cm)

WEIGHT 216 lbs (98 kg)

MAX USER WEIGHT 330 lbs (150 kg)

POWER REQUIREMENTS Standard: 110V, Optional: 220-240V

COLOR Dark Gray



FF-FT500

Light Commercial Folding Treadmill

CONSOLE LED

LENGTH 82" (210.6 cm)

WIDTH 41" (106 cm)

HEIGHT 54"H (139 cm)

WEIGHT 326.5 lbs (148 kg)

MAX USER WEIGHT 330 lbs (150 kg)

POWER REQUIREMENTS Standard: 110V, Optional: 220-240V

COLOR Silver/Black



FF-CT-70

Manual Curve Treadmill w/Aluminum Belt

CONSOLE LCD

LENGTH 72.8" (184.9 cm)

WIDTH 33.8" (85.8 cm)

HEIGHT 62.2" (157.9 cm)

WEIGHT 363 lbs (165 KG)

MAX USER WEIGHT 396 lbs (180 kg)

POWER REQUIREMENTS Self-generating

COLOR Black



FF-CT-100

Manual Curve Treadmill w/Aluminum Belt

CONSOLE LED

LENGTH 70.9" (180 cm)

WIDTH 38.2"W (97 cm)

HEIGHT 64.2" (163 cm)

WEIGHT 355 lbs (161 kg)

MAX USER WEIGHT 396.8 lbs (180 kg)

POWER REQUIREMENTS Self-generating

COLOR Black



FF-CT80

Manual Curve Treadmill w/Resistance

CONSOLE LCD
LENGTH 78" (198.1 cm)
WIDTH 34" (86.3 cm)
HEIGHT 59.5" (151.1 cm)
WEIGHT 346 lbs (157 kg)
MAX USER WEIGHT 400 lbs (181.4 kg)
POWER REQUIREMENTS Self-generating
COLOR Black



FF-T600

Treadmill w/7" Blue LCD Screen

CONSOLE LCD
LENGTH 89.7" (228 cm)
WIDTH 37.4" (95 cm)
HEIGHT 66.9" (170 cm)
WEIGHT 432 lbs (196 kg)
MAX USER WEIGHT 440 lbs (200 kg)
POWER REQUIREMENTS 16A AC 250V
COLOR Black



FF-T700

Commercial Treadmill

CONSOLE LED
LENGTH 91.3" (232 cm)
WIDTH 38" (96.5 cm)
HEIGHT 66.7" (169.5 cm)
WEIGHT 443 lbs (201 kg)
MAX USER WEIGHT 440 lbs (200 kg)
POWER REQUIREMENTS 220V
COLOR Dark Gray



FF-T800

Commercial Treadmill

CONSOLE LED
LENGTH 89" (226 cm)
WIDTH 38" (96.5cm)
HEIGHT 69" (175.2 cm)
WEIGHT 406lbs (184 kg)
MAX USER WEIGHT 400 lbs (180 kg)
POWER REQUIREMENTS AC 120V, 15AMP
COLOR Black

FF-T800



Commercial Treadmill

CONSOLE LED **LENGTH** 89" (226 cm) **WIDTH** 38" (96.5cm) **HEIGHT** 69" (175.2 cm)
WEIGHT 406lbs (184 kg) **MAX USER WEIGHT** 400 lbs (180 kg)
POWER REQUIREMENTS AC 120V, 15AMP **COLOR** Black

FF-T900



Commercial Treadmill w/18.5" Touchscreen

CONSOLE LED **LENGTH** 87.8" (223 cm) **WIDTH** 36.2" (92 cm) **HEIGHT** 62.2" (158 cm)
WEIGHT 474 lbs (215 kg) **MAX USER WEIGHT** 400 lbs (180 kg)
POWER REQUIREMENTS AC 110V **COLOR** Black

FF-T700



Commercial Treadmill

CONSOLE LED **LENGTH** 91.3" (232 cm)
WIDTH 38" (96.5 cm) **HEIGHT** 66.7" (169.5 cm)
WEIGHT 443 lbs (201 kg)
MAX USER WEIGHT 440 lbs (200 kg)
POWER REQUIREMENTS 220V **COLOR** Dark Gray

FF-ST100



Slat Belt Commercial Treadmill

CONSOLE LED **LENGTH** 81.3" (206.5 cm)
WIDTH 37" (94 cm) **HEIGHT** 67.7" (172 cm)
WEIGHT 513.7 lbs (233 kg)
MAX USER WEIGHT 440 lbs (200 kg)
POWER REQUIREMENTS 110V
COLOR Black



FF-AR

Air Rower

LENGTH: 95.2" (242 cm)
HEIGHT: 24.4" (62 cm)
WIDTH: 41.7" (106 cm)

MATERIAL:
Construction: Aluminum front legs, steel rear legs
Monitor Arm: ABS plastic

RESISTANCE LEVEL:
10

MAX USER WEIGHT: 500 lbs (227 kg)
PRODUCT WEIGHT: 68 lbs (31 kg)



FF-SKI

Ski Exercise Machine w/Air Resistance

LENGTH: 51.9" (130 cm)
HEIGHT: 23.6" (60 cm)
WIDTH: 84.2" (214 cm)

MATERIAL:
Steel

RESISTANCE LEVEL:
10

MAX USER WEIGHT: 330 lbs (150 kg)
PRODUCT WEIGHT: 119 lbs (54 kg)



FF-WR40

Water Rowing Machine Rower

LENGTH: 87" (221 cm)
HEIGHT: 19.75" (50 cm)
WIDTH: 27.62" (70 cm)

MATERIAL:
Red Ash wood frame material

RESISTANCE LEVEL:
21L (17L recommended) of fluid resistance

MAX USER WEIGHT: 330 lbs (150 kg)
PRODUCT WEIGHT: 92.5 lbs (42 kg)



FF-WR80

Water Rowing Rower Machine w/Resistance

LENGTH: 76.7" (195 cm)
HEIGHT: 22.4" (57 cm)
WIDTH: 21.6" (55 cm)

MATERIAL:
Material: Red Oak wood frame material
Cushion: PU Water Tank: PC

RESISTANCE LEVEL:
1-8

MAX USER WEIGHT: 330.6 lbs (150 kg)
PRODUCT WEIGHT: 77 lbs (35 kg)

FRENCH FITNESS

10

FLOORING

FF-PVC255



2.5'x5' PVC Foam Recumbent Bike Floor Mat

MATERIAL PVC **LENGTH** 60" (5 ft) **WIDTH** 30" (2.5 ft)
THICKNESS 1/4" (6 mm) **WEIGHT** 4.1 lbs (1.86 kg)

FF-PVC34



3'x4' PVC Foam Bike & Stepper Floor Mat

MATERIAL PVC **LENGTH** 48" (4 ft) **WIDTH** 36" (3 ft)
THICKNESS 1/4" (6 mm) **WEIGHT** 3.9 lbs (1.78 kg)

FF-PVC365



3'x6.5' PVC Foam Elliptical Floor Mat

MATERIAL PVC **LENGTH** 78" (6.5 ft) **WIDTH** 36" (3 ft)
THICKNESS 1/4" (6 mm) **WEIGHT** 6.4 lbs (2.9 kg)

FF-PVC375



3'x7.5' PVC Foam Treadmill Floor Mat

MATERIAL PVC **LENGTH** 90" (7.5 ft) **WIDTH** 36" (3 ft)
THICKNESS 1/4" (6 mm) **WEIGHT** 6.8 lbs (3.1 kg)

FF-PVC45



4'x5' PVC Foam Elliptical Floor Mat

MATERIAL PVC **LENGTH** 60" (5 ft) **WIDTH** 48" (4 ft)
THICKNESS 1/4" (6 mm) **WEIGHT** 6.56 lbs (2.98 kg)

FF-PVC48



4'x8' PVC Foam Elliptical Floor Mat

MATERIAL PVC **LENGTH** 96" (8 ft) **WIDTH** 48" (4 ft)
THICKNESS 1/4" (6 mm) **WEIGHT** 10.9 lbs (4.96 kg)

FF-RIT24

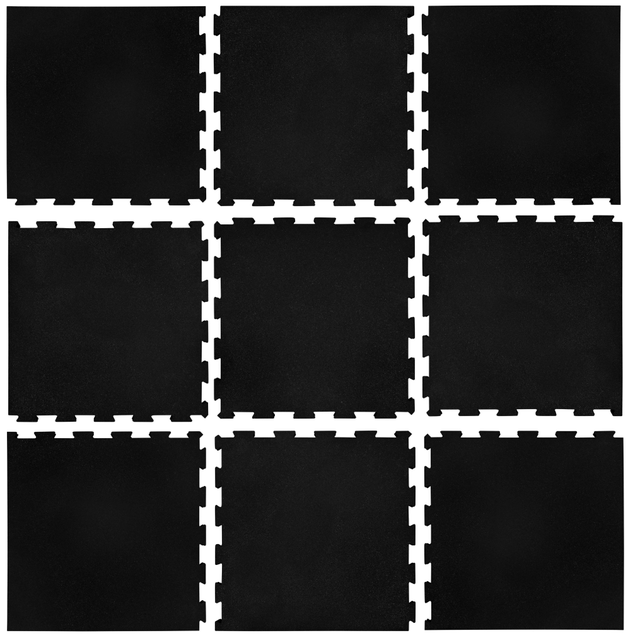

24" x 24" Rubber Gym Interlocking Tiles w/Edge, Middle, Corner Pieces

MATERIAL: Rubber
DENSITY: Approx. 950 kg/m3
THICKNESS: 1/2" (12mm)
WEIGHT: 8 lbs

DIMENSIONS:

Center Pieces: Four sides with interlock
Edge Pieces: Three sides with interlock
Corner Pieces: Two sides with interlock

24" × 24" (61 cm x 61 cm)

FF-EIT24

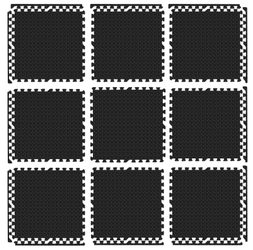

24" x 24" Eva Interlocking Tiles

MATERIAL EVA **WEIGHT** 9.55 lbs
LENGTH 24" (610 mm) each mat
WIDTH 24" (610 mm) each mat
DENSITY 90 kg/m³ **THICKNESS** 1/2" (12mm)

FF-RITGF

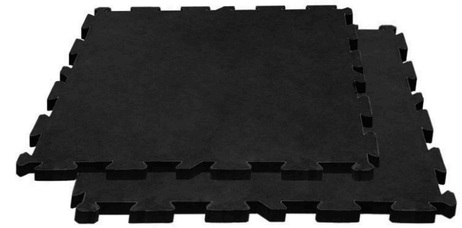

Rubber Interlocking Tiles Gym Flooring (39.37"x39.37" ea)

MATERIAL Rubber **LENGTH** 39.37" (each mat)
WIDTH 39.37" (each mat)
THICKNESS 0.4" (10 mm) **WEIGHT** 22 lbs

FF-RSGF



Rubber Square Gym Flooring (39.37"x39.37" ea)

MATERIAL Rubber **LENGTH** 39.37" (each mat)
WIDTH 39.37" (each mat)
THICKNESS 0.6" (15 mm) **WEIGHT** 30 lbs

FF-RRGF



Rubber Roll Gym Flooring (10m x 1m)

MATERIAL Rubber **LENGTH** 32.8 ft (393.7")
WIDTH 3.28 ft (39.37") **THICKNESS** 0.4" (10 mm)
WEIGHT 231.49 lbs

FF-HDRFM



4' x 6' Heavy Duty Rubber Floor Mat 3/4"

MATERIAL Rubber **LENGTH** 6' (48") **WIDTH** 4' (48")
DENSITY Approx. 1,000 kg/m3
THICKNESS 0.75" (19 mm) **WEIGHT** 94.8 lbs

FF-RF-TS12

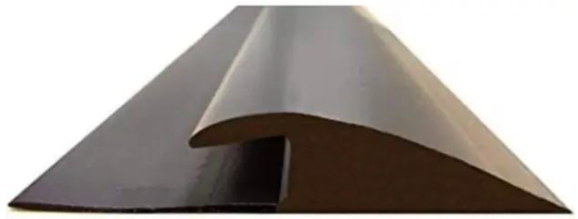

Rubber Flooring Ramps Beveled Edge Transition Strip 12mm

MATERIAL Rubber **WIDTH** 50 mm **HEIGHT** 12 mm
WEIGHT 0.4 lbs /ft

FF-AGSL



Artificial Grass Synthetic Lawn Turf Flooring Roll 65.5' x 6.5'

MATERIAL PE + PP **LENGTH** 787.5" (20 m) - Per Rol
WIDTH 78.7" (2 m) - Per Rol
THICKNESS 2.5 cm (Grass Height) **WEIGHT** 461.87 lbs

FF-APGT-1450



Artificial Performance Gym Turf Track w/Start Marker - 14 ft x 50 ft

MATERIAL PE + PP **LENGTH** 50'L (15.24 m) - Per Rol
WIDTH 13.75' (420 cm) - Per Rol
THICKNESS 2 cm (Grass Height) **WEIGHT** 133 lbs

FF-AGSL-V3



Artificial Grass Synthetic Lawn Turf Flooring Roll 65.5' x 6.5' - Weight: 12000

MATERIAL PE + PP **LENGTH** 984.2" (25 m) Per Roll
WIDTH 78.7" (2 m) Per Roll
DENSITY 21000 stitches per sqm
THICKNESS 3 cm (Grass Height)
WEIGHT 297.6 lbs (135 kg) - Weight Per Roll

FF-AGSL-V2



Artificial Grass Synthetic Lawn Turf Flooring Roll 65.5' x 6.5' - Weight: 9000

MATERIAL PE + PP **LENGTH** 984.2" (25 m) Per Roll
WIDTH 78.7" (2 m) Per Roll
DENSITY 21000 stitches per sqm
THICKNESS 3 cm (Grass Height)
WEIGHT 297.6 lbs (135 kg) - Weight Per Roll

FRENCH FITNESS

11

GYM ACCESSORIES

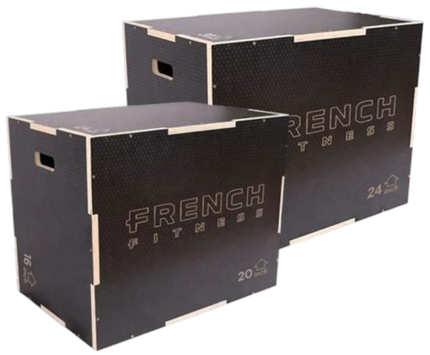

FFB-WPB

Wooden Plyo Box

MATERIAL Plywood

DIMENSIONS (L × W × H)
24" × 20" × 16" (60 cm × 50 cm × 40 cm)
30" × 24" × 20" (75 cm × 60 cm × 50 cm)

WEIGHTS 34 lbs (15.5 kg), 54 lbs (24.5 kg)

COLOR Brown



FF-SFPB

3-In-1 Soft Foam Plyo Box

MATERIAL Pro-duty firm foam

DIMENSIONS (L × W × H)
24" × 20" × 16" (60.96 cm × 50.8 cm × 40.64 cm)
30" × 24" × 20" (76.2 cm × 60.96 cm × 50.8 cm)

WEIGHTS 33.1 lbs (15 kg), 38.63 lbs (17.5 kg)

COLOR Black/Red/White

FF-SPB



Steel Plyo Jump Box

MATERIAL Steel Tubing, Rubber Stoppers, Rubber Mat

DIMENSIONS (L × W × H)
13" × 13" × 6" (5.8 cm × 5.8 cm × 2.7 cm)
15" × 15" × 12" (38.1 cm × 38.1 cm × 30.48 cm)
18" × 18" × 18" (45.72 cm × 45.72 cm × 45.72 cm)
21" × 21" × 24" (53.34 cm × 53.34 cm × 60.96 cm)
23" × 23" × 30" (58.42 cm × 58.42 cm × 76.2 cm)
28" × 28" × 36" (71.12 cm × 71.12 cm × 91.44 cm)
31" × 31" × 42" (78.74 cm × 78.74 cm × 106.68 cm)

WEIGHTS
15.4 lbs (7 kg), 19.8 lbs (9 kg), 23.15 lbs (10.5 kg), 27.55 lbs (12.5 kg)

COLOR Red/Black

FF-SPB



Steel Plyo Box Set of 4 (12",18",24",30")

MATERIAL Steel Tubing, Rubber Stoppers, Rubber Mat

DIMENSIONS (L × W × H)

15" × 15" × 12" (38.1 cm × 38.1 cm × 30.48 cm)
18" × 18" × 18" (45.72 cm × 45.72 cm × 45.72 cm)
21" × 21" × 24" (53.34 cm × 53.34 cm × 60.96 cm)
23" × 23" × 30" (58.42 cm × 58.42 cm × 76.2 cm)

WEIGHT 85.98 lbs (39 kg)

COLOR Red/Black

FF-SPBS7



Steel Plyo Box Set of 7 (6", 12", 18", 24", 30", 36", 42")

MATERIAL Steel Tubing, Rubber Stoppers, RubberMat

DIMENSIONS (L × W × H)

13" × 13" × 6" (33.02 cm × 33.02 cm × 15.24 cm)
15" × 15" × 12" (38.1 cm × 38.1 cm × 30.48 cm)
18" × 18" × 18" (45.72 cm × 45.72 cm × 45.72 cm)
21" × 21" × 24" (53.34 cm × 53.34 cm × 60.96 cm)
23" × 23" × 30" (58.42 cm × 58.42 cm × 76.2 cm)
28" × 28" × 36" (71.12 cm × 71.12 cm × 91.44 cm)
31" × 31" × 42" (78.74 cm × 78.74 cm × 106.68 cm)

COLOR Red/Black

FF-PSSJB60



6-60 Plyo Stackable Soft Jump Boxes - Set of 4

MATERIAL Thick and durable foam core

DIMENSIONS (L × W × H)

35.5" × 29.5" × 6" (90.17 cm × 74.93 cm × 15.24 cm)
35.5" × 29.5" × 12" (90.17 cm × 74.93 cm × 30.48 cm)
35.5" × 29.5" × 18" (90.17 cm × 74.93 cm × 45.72 cm)
35.5" × 29.5" × 24" (90.17 cm × 74.93 cm × 60.96 cm)

TOTAL DIMENSIONS

35.5" × 29.5" × 60" (90.17 cm × 74.93 cm × 152.4 cm)

WEIGHTS

9 lbs (4.08 kg),14 lbs (6.35 kg), 19 lbs (8.61 kg), 25 lbs (11.33 kg). Total Weight: 67 lbs (30.39 kg)

COLOR Green, Blue, Red, Black

FF-SWJB-S8



Stackable Wood Jerk Blocks - Set of 8 Boxes

MATERIAL Wood

DIMENSIONS (L × W × H)

36" × 20" × 15" (91.44 cm × 50.8 cm × 38.1 cm)
36" × 20" × 12" (91.44 cm × 50.8 cm × 30.48 cm)
36" × 20" × 6" (91.44 cm × 50.8 cm × 15.24 cm)
36" × 20" × 2.25" (91.44 cm × 50.8 cm × 5.71 cm)

WEIGHTS

70 lbs (31.75 kg), 61 lbs (27.66 kg), 38 lbs (17.23 kg), 25 lbs (11.33 kg)

COLOR Natural Brown

FF-FW-SB

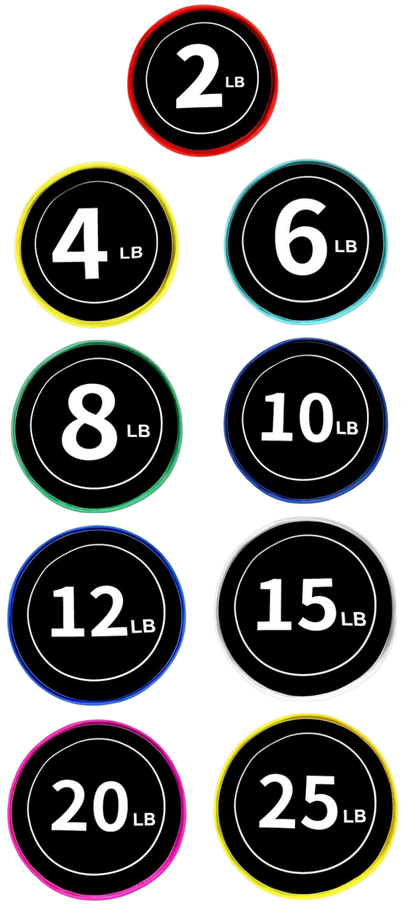

Free Weight Sandbag Bell

MATERIAL:
Durable high-quality neoprene filled with sand

WEIGHTS:
2/4/6/8/10/12/15/20/25 lbs

FF-SS



Strongman Sandbag

MATERIAL:
Nylon

WEIGHTS:
100/150/250lb

FF-AWV



Adjustable Weighted Vest

LENGTH:
13" (33 cm)

WIDTH:
4" (10.16 cm)

HEIGHT:
17.5" (44.45 cm)

WEIGHTS:
20.4 lbs (9.25 kg),
40.2 lbs (18.23 kg)

MATERIAL:
Nylon and Polyester

FF-WPSB



Weighted Power Sand Bag

MATERIAL:
Durable vinyl cover

LENGTH:
23"

DIAMETER:
8" (Bag Straps are additional, this is the cylinder part of bag only)

WEIGHT:
10 lbs (4.5 kg), 20 lbs (9.1 kg), 30 lbs (13.6 kg), 40 lbs (18.2 kg), 50 lbs (22.6 kg), 60 lbs (27.2 kg), 70 lbs (31.7 kg), 80 lbs (36.2 kg)

FF-WPSB100



Weighted Power Sand Bag Set - 100 lb

MATERIAL:
Durable vinyl cover

LENGTH:
23"

DIAMETER:
8" (Bag Straps are additional, this is the cylinder part of bag only)

WEIGHT:
10 lbs (4.5 kg), 20 lbs (9.1 kg), 30 lbs (13.6 kg), 40 lbs (18.2 kg)

FF-WPSB460



Weighted Power Sand Bag Set - 460 lb

MATERIAL:
Durable vinyl cover

LENGTH:
23"

DIAMETER:
8" (Bag Straps are additional, this is the cylinder part of bag only)

WEIGHT:
10 lbs (4.5 kg), 20 lbs (9.1 kg), 30 lbs (13.6 kg), 40 lbs (18.2 kg), 50 lbs (22.6 kg), 60 lbs (27.2 kg), 70 lbs (31.7 kg), 80 lbs (36.2 kg)



FF-ASRSB

Aluminum Speed Rope w/Swivel Bearings

ROPE LENGTH 118" (300 cm) **ROPE DIAMETER** 0.1" (0.26 cm)
ROPE HEIGHT 6.3" (16 cm) **WEIGHT** 0.37 lbs (0.17 kg) **COLOR** Black



FF-GWR20

Gymnastic Gym Wood Rings w/Adjustable Straps

MATERIAL Birch wood, Adjustable nylon straps **DIAMETER** 1.1" (2.8 cm)
RIBBON 177" (450 cm) **WEIGHT** 3.62 lbs (1.64 kg) **COLOR** Natural Brown, Black



FF-SSVJR

Speed Skipping Vinyl Jump Rope

MATERIAL PVC **LENGTH** 128" (352.12 cm) **WEIGHT** 0.20 lb (0.09 kg)
COLOR Black



FF-JCR30

Jute Climbing Rope 1.5 in x 30 ft

MATERIAL Jute **LENGTH** 29' 6" (899.16 cm) **DIAMETER** 1.5" (3.8 cm)
WEIGHT 13.5 lb (6.12 kg) **COLOR** Natural Brown



FF-JTR30

Jute Tow Rope 1.5 in x 30 ft

MATERIAL Jute **LENGTH** 29' 6" (899.16 cm) **DIAMETER** 1.5" (3.8 cm)
WEIGHT 13.5 lb (6.12 kg) **COLOR** Natural Brown

FF-BR15 FF-BR20



Training Battle Rope

MATERIAL 100% poly dacron **WEIGHTS** 26/32/39/39.7/60.1 lbs
SIZES 1.5in x 30ft / 1.5in x 40ft / 1.5in x 50ft / 2in x 40ft / 2in x 50ft
COLOR Black

FF-RB50



Mini Resistance Bands Exercise Loop

MATERIAL 100% natural latex
RESISTANCE LEVELS X-Light (5-10lb Green), Light (10-15lb Blue), Medium (15-20lb Yellow), Heavy (25-30lb) Red, X-Heavy (30-40lb Black)
LENGTH 24" (60 cm) **WIDTH** 2" (5 cm)

FF-RB5



Resistance Band w/Handles

MATERIAL Tapered tube with a tough rubber outer surface

RESISTANCE LEVELS X-Light (5-10lb Yellow), Light (8-15 lb Red), Medium (13-20 lb Blue), Heavy (18-25 lb Green), X-Heavy (23-30 lb Black)

LENGTH 47.2" (120 cm) **WIDTHS** 0.3"/0.35"/0.39"/0.43"

FF-RBS5



Resistance Band

MATERIAL 100% natural latex and high-quality ABS and EVA

RESISTANCE LEVELS 10 lb (Yellow), 20 lb (Blue), 30 lb (Green), 40 lb (Black), 50 lb (Red)

LENGTH 48" (121.92 cm)

FF-RB5



FF-RB50



Mini Resistance Bands Exercise Loops 600mm x 50mm, Set of 5

MATERIAL 100% natural latex

RESISTANCE LEVELS X-Light (5-10lb Green), Light (10-15 lb Blue), Medium (15-20 lb Yellow), Heavy (25-30 lb Red), X-Heavy (30-40 lb Black)

LENGTH 47.2" (120 cm) **WIDTH** 2" (5 cm)

FF-RBS5



French Fitness Resistance Band Set, 5 Pack

MATERIAL 100% natural latex and high-quality ABS and EVA

RESISTANCE LEVELS 10 lb, 15 lb, 20 lb, 25 lb, 30 lb

LENGTH 47.2" (120 cm)

COLOR Yellow, Red, Blue, Green, Black

Resistance Band Set of 5 w/Handles

MATERIAL:
Tapered tube with a tough rubber outer surface

COLOR:
Yellow, Red, Blue, Green, Black

DIMENSIONS:
47.2" × 0.3" × 0.2" (120 cm × 0.8 cm × 0.5 cm)
47.2" × 0.35" × 0.2" (120 cm × 0.9 cm × 0.5 cm)
47.2" × 0.39" × 0.25" (120 cm × 1.0 cm × 0.6 cm)
47.2" × 0.43" × 0.25" (120 cm × 1.1 cm × 0.6 cm)
47.2" × 0.43" × 0.28" (120 cm × 1.1 cm × 0.7 cm)

RESISTANCE LEVEL:
X-Light (5-10 lb), Light (8-15 lb), Medium (13-20 lb), Heavy (18-25 lb), X-Heavy (23-30 lb)

FF-RPAB



Resistance Pull Up Assist Band

LENGTH:
41" (104 cm)

MATERIAL:
Natural latex

RESISTANCE LEVEL:
Very Light (8-15 lb)
Light (15-35 lb)
Light/Medium (25-65 lb)
Medium (35-85 lb)
Medium/Heavy (50-125 lb)
Heavy (65-175 lb)
Super Heavy (80-230 lb)

COLOR:
Yellow
Red
Black
Purple
Green
Blue
Orange

FF-TRTB5



Toning Resistance Tube Bands Set of 5 w/Handles

MATERIAL:
Rubber tubes

COLOR:
Yellow, Red, Blue, Green, Black

RESISTANCE LEVEL:
10 lb, 15 lb, 20 lb, 25 lb, 30 lb

DIMENSIONS:

FF-STP3



Suspension Trainer STP3 w/Rubber Handle

MATERIAL Nylon **LENGTH** 53" (134.62 cm) **WIDTH** 1.5" (3.81 cm)
HEIGHT 6" (15.24 cm) **WEIGHT** 1.7 lb (0.77 kg) **COLOR** Yellow

FF-BNR-HVM-2496



Vinyl Mesh 24" x 96" Horizontal Banner

MATERIAL Vinyl Mesh fabric

DIMENSIONS: 24" x 96" (2ft x 8ft)

FF-RPAB6



Resistance Pull Up Assist Bands – Set of 7

LENGTH:
41" (104 cm)

MATERIAL:
Natural latex

RESISTANCE LEVEL:
Very Light (8-15 lb)
Light (15-35 lb)
Light/Medium (25-65 lb)
Medium (35-85 lb)
Medium/Heavy (50-125 lb)
Heavy (65-175 lb)
Super Heavy (80-230 lb)

COLOR:
Yellow
Red
Black
Purple
Green
Blue
Orange

WEIGHT:
5.007 lbs (2.271 kg)

FF-TRTB3

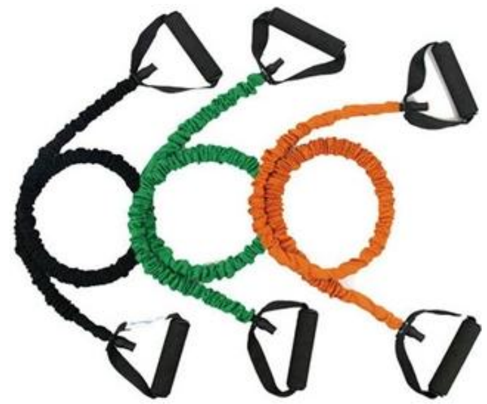

Toning Resistance Tube Bands - Set of 3

MATERIAL:
Rubber tubes

RESISTANCE LEVEL:
Light
Medium
Heavy

COLOR:
Orange
Green
Black

DIMENSIONS:
47"L × 0.35"OD × 0.2"ID (119.38 cm × 0.89 cm × 0.51 cm)
47"L × 0.39"OD × 0.2"ID (119.38 cm × 0.99 cm × 0.51 cm)
47"L × 0.43"OD × 0.2"ID (119.38 cm × 1.09 cm × 0.51 cm)

FF-TRTB3-BLACK

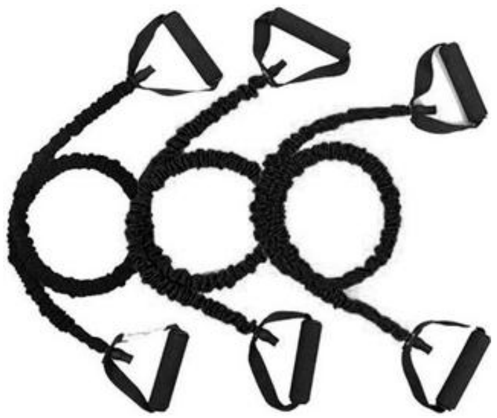

Black Toning Resistance Tube Bands – Set of 3

MATERIAL:
Rubber tubes

RESISTANCE LEVEL:
Light
Medium
Heavy

COLOR:
Black

DIMENSIONS:
0.2" × 0.35" × 47" (0.51 cm × 0.89 cm × 119.38 cm)
0.2" × 0.39" × 47" (0.51 cm × 0.99 cm × 119.38 cm)
0.2" × 0.43" × 47 (0.51 cm × 1.09 cm × 119.38 cm)

FF-HYM



6mm Hanging Yoga Mat

MATERIAL TPE **LENGTH** 72" (182.8 cm)
WIDTH 24" (60.9 cm)
HOLE WIDTH 19.3" (49 cm)
THICKNESS 6 mm **COLOR** Black

FF-HYM-15mm



15mm Extra Thick Hanging Yoga Mat

MATERIAL NBR **LENGTH** 72" (182.8 cm)
WIDTH 24" (60.9 cm)
HOLE WIDTH 19.3" (49 cm)
THICKNESS 15 mm **COLOR** Black

FF-PVCYM



PVC Yoga Mat

MATERIAL High-density foam
LENGTH 68" (172.7 cm)
WIDTH 24" (60.9 cm)
THICKNESS 6 mm
COLOR Blue/Purple

FF-TFFEM



Tri-Fold Folding Exercise Mat

MATERIAL High density EPE
LENGTH 71.2" (180.8 cm)
WIDTH 23.6" (59.9 cm)
THICKNESS 45 mm
WEIGHT 9.2 lb (4.2 kg) **COLOR** Black

FF-AM2



AM2 Ab Mat

MATERIAL High-density foam
LENGTH 14.1" (35.8 cm)
WIDTH 11.8" (29.9 cm)
HEIGHT 2.3" (5.8cm)
COLOR Black

FF-YW125



12.5 x 5 Inch Yoga Wheel

MATERIAL TPE+ABS
LENGTH 12.5" (32 cm)
WIDTH 5" (13 cm) **HEIGHT** 0.6" (1.5 cm)
THICKNESS 15 mm **COLOR** Black

FF-CMFGM



8' x 6'/4' x 2" Crash Mats - 3-Fold 4-Section Folding Gymnastics Mat

MATERIAL PVC and EPD Foam
WEIGHT 12 lb **LENGTH** 96" (243.8 cm)
WIDTH 72" (182.9 cm)
HEIGHT 2" (5 cm) **COLOR** Red

FF-YCB



3"/4" Yoga Cork Block

MATERIAL Natural cork
LENGTH 9" (22.8 cm)
WIDTH 6" (15.2cm)
THICKNESS 3"/4"
WEIGHT 2.2 lb (1 kg) / 1.6 lbs (0.72 kg)
COLOR Light Brown

FF-SB14



14" Slam Ball Non-Bounce Medicine Ball

MATERIAL
Heavy-duty materials to withstand impact and rough handling

DIAMETER 14" (35 cm)

PRODUCT WEIGHT
10 lbs (4.5 kg) / 15 lbs (6.8 kg) / 20 lbs (9.1kg) / 25 lbs (11.3 kg) / 30 lbs (13.6 kg)

TEXTURE Textured

COLOR Black

FF-SB14-100



14" Slam Ball – Non-Bounce Medicine Ball Set of 5 (10 to 30 lbs)

MATERIAL
Heavy-duty materials to withstand impact and rough handling

DIAMETER 14" (35 cm)

PRODUCT WEIGHT 100 lbs (45.5 kg)

TEXTURE Textured

COLOR Black

FF-SB



PVC Slam Ball

MATERIAL
Heavy-dPVC shell and iron sand-filleduty materials to withstand impact and rough

LENGTH 9" (22.8 cm) / 11 " (27.9 cm) / 13" (33 cm)

WIDTH 9" (22.8 cm) / 11 " (27.9 cm) / 13" (33 cm)

HEIGHT 9" (22.8 cm) / 11 " (27.9 cm) / 13" (33 cm)

PRODUCT WEIGHT
5 lb (2.2 kg) / 10 lb (4.5 kg) / 15 lb (6.8 kg) / 20 lb (9.1 kg) / 25 lb (11.3 kg) / 30 lb (13.6 kg) / 35 lb (15.8 kg) / 40 lb (18.1 kg) / 45 lb (20.4 kg) / 50 lb (22.6 kg) / 55 lb (24.9 kg) / 60 lb (27.2 kg) / 65 lb (29.4 kg) / 70 lb (31.7 kg) / 75 lb (34 kg) / 80 lb (36.3 kg) / 90 lb (40.8 kg) / 100 lb (45.3 kg)

TEXTURE Textured **COLOR** Black

FF-SB100



PVC Slam Ball Set of 5 (10 to 30 lbs)

MATERIAL:
PVC shell and iron sand-filled

DIMENSIONS:
10, 15, 20 lb – 9"L × 9"W × 9"H (23cm × 23cm × 23cm)
25, 30 lb – 11"L × 11"W × 11"H (28cm × 28cm × 28cm)

PRODUCT WEIGHT:
10, 15, 20, 25, 30 lb – total 100 lbs

TEXTURE:
Textured

COLOR:
Black

FF-SB180



PVC Slam Ball Set of 8 (5 to 40 lbs)

MATERIAL:
PVC shell and iron sand-filled

DIMENSIONS:
5, 10, 15, 20 lb – 9" × 9" × 9" (23cm × 23cm × 23cm)
25, 30, 35, 40 lb – 11" × 11" × 11" (28cm × 28cm × 28cm)

PRODUCT WEIGHT:
5, 10, 15, 20, 25, 30, 35, 40 lb – total 180 lbs

TEXTURE:
Textured

COLOR:
Black

FF-SB275



PVC Slam Ball Set of 10 (5 to 50 lbs)

MATERIAL:
PVC shell and iron sand-filled

DIMENSIONS:
5, 10, 15, 20 lb – 9" × 9" × 9" (23cm × 23cm × 23cm)
25, 30, 35, 40, 45, 50 lb – 11" × 11" × 11" (28cm × 28cm × 28cm)

PRODUCT WEIGHT:
5, 10, 15, 20, 25, 30, 35, 40, 45, 50 lb – total 275 lbs

TEXTURE:
Textured

COLOR:
Black



FF-DGMB

Dual Grip Medicine Ball w/ Handles

LENGTH: 10.7" (27.2 cm)

WIDTH: 10.7" (27.2 cm)

HEIGHT: 10.7" (27.2 cm)

TEXTURE: Textured

COLOR: Black and Orange

MATERIAL: Flexible elastic natural rubber

PRODUCT WEIGHT:
4 lb (1.8 kg) / 6 lb (2.7 kg) / 8 lb (3.6 kg) / 10 lb (4.5 kg) / 12 lb (5.4 kg) / 14 lb (6.3 kg) / 16 lb (7.2 kg) / 18 lb (8.1 kg) / 20 lb (9.1 kg) / 25 lb (11.3 kg) / 30 lb (13.6 kg)

FF-DGMB-S10-430



Dual Grip Medicine Ball Set of 10 (4 to 30 lbs)

MATERIAL:
Flexible elastic natural rubber

DIMENSIONS:
4, 6, 8 lb - 9" x 9" x 9" (230 mm, 230 mm, 230 mm)
10, 12, 14, 16, 20, 25, 30 lb - 10.7" x 10.7" x 10.7" (272 mm, 272 mm, 272 mm)

PRODUCT WEIGHT:
4 lb, 6 lb, 8 lb, 10 lb, 12 lb, 14 lb , 16 lb, 20 lb, 25 lb, 30 lb - total 145 lbs

TEXTURE: Textured

COLOR: Black and Orange

FF-DGMB-S10-625



Dual Grip Medicine Ball Set of 10 (6 to 25 lbs) w/ Rack

MATERIAL:
Flexible elastic natural rubber

DIMENSIONS:
6, 8 lb - 9" x 9" x 9" (230 mm, 230 mm, 230 mm)
10, 12, 14, 16, 20, 25 lb - 10.7" x 10.7" x 10.7" (272 mm, 272 mm, 272 mm)
French Fitness 10 Pair Vertical Medicine, Wall & Slam Ball Rack - 9.4" x 9.4" x 9.4" (240 mm, 240 mm, 240mm)

PRODUCT WEIGHT:
6 lb, 8 lb, 10 lb, 12 lb, 14 lb (2) , 16 lb, 20 lb (2), 25 lb - total 145 lbs

TEXTURE:
Textured

COLOR:
Black and Orange

FF-RMB



Rubber Medicine Ball

MATERIAL:
Sturdy rubber, Extra-tough and thick shell

DIMENSIONS:
7.4" x 7.4" x 7.4" (18.8 cm x 18.8 cm x 18.8 cm)
8.6" x 8.6" x 8.6" (21.8 cm x 21.8 cm x 21.8 cm)
9.4" x 9.4" x 9.4" (23.9 cm x 23.9 cm x 23.9 cm)
11.2" x 11.2" x 11.2" (28.4 cm x 28.4 cm x 28.4 cm)

PRODUCT WEIGHT:
4 lb (1.8 kg) / 6 lb (2.7 kg) / 8 lb (3.6 kg) / 10 lb (4.5 kg) / 12 lb (5.4 kg) / 14 lb (6.3 kg) / 16 lb (7.2 kg) / 18 lb (8.1 kg) / 20 lb (9.1 kg) / 25 lb (11.3 kg) / 30 lb (13.6 kg)

TEXTURE:
Grippy dimpled texture

COLOR:
Black and Grey

FF-SMWB



Soft Medicine Wall Ball

MATERIAL:
Soft and comfortable PU

DIMENSIONS:
13.7" x 13.7" x 13.7" (34.8 cm x 34.8 cm x 34.8 cm)

PRODUCT WEIGHT:
4 lb (1.8 kg) / 6 lb (2.7 kg) / 8 lb (3.6 kg) / 10 lb (4.5 kg) / 12 lb (5.4 kg) / 14 lb (6.3 kg) / 16 lb (7.2 kg) / 18 lb (8.1 kg) / 20 lb (9.1 kg) / 25 lb (11.3 kg) / 30 lb (13.6 kg) / 35 lb (15.9 kg) / 40 lb (18.1 kg)

TEXTURE:
Soft

COLOR:
Black and Grey

FF-RMB-S6-620



Rubber Medicine Ball Set of 6 (6 to 20 lbs)

MATERIAL:
Sturdy rubber, Extra-tough and thick shell

DIMENSIONS:
6, 8 lb - 8.6" x 8.6" x 8.6" (22 cm, 22 cm, 22 cm)
10 lb - 9.4" x 9.4" x 9.4" (23.9 cm, 23.9 cm, 23.9 cm)
14, 16, 20 lb - 11.2" x 11.2" x 11.2" (28.6 cm, 28.6 cm, 28.6cm)

PRODUCT WEIGHT:
6, 8, 10, 14, 16, 20 - total 74 lbs

TEXTURE:
Grippy dimpled texture

COLOR:
Black and Grey

FF-RMB-S10-430



Rubber Medicine Ball Set of 10 (4 to 30 lbs)

MATERIAL:
Sturdy rubber, Extra-tough and thick shell

DIMENSIONS:
4 lb - 7.4" x 7.4" x 7.4" (19 cm, 19 cm, 19 cm)
6, 8 lb - 8.6" x 8.6" x 8.6" (22 cm, 22 cm, 22 cm)
10, 12 lb - 9.4" x 9.4" x 9.4" (23.9 cm, 23.9 cm, 23.9 cm)
14, 16, 20, 25, 30 lb - 11.2" x 11.2" x 11.2" (28.6 cm, 28.6 cm, 28.6 cm)

PRODUCT WEIGHT:
4, 6, 8, 10, 12, 14, 16, 20, 25, 30 lb - total 145 lbs

TEXTURE:
Grippy dimpled texture

COLOR:
Black and Grey

FF-RMB6-25-MBR10



Rubber Medicine Ball Set of 10 (6 to 25 lbs) w/Rack

MATERIAL:
Sturdy rubber, Extra-tough and thick shell

DIMENSIONS:
6, 8 lb - 8.6" x 8.6" x 8.6" (22 cm, 22 cm, 22 cm)
10, 12 lb - 9.4" x 9.4" x 9.4" (23.9 cm, 23.9 cm, 23.9 cm)
14 (2), 16, 20 (2), 25 lb - 11.2" x 11.2" x 11.2" (28.6 cm, 28.6 cm, 28.6 cm)
French Fitness 10 Pair Vertical Medicine, Wall & Slam Ball Rack - 9.4" x 9.4" x 9.4" (240 mm, 240 mm, 240 mm)

PRODUCT WEIGHT:
6, 8, 10, 12, 14 (2), 16, 20 (2), 25, 30 lb - total 145 lbs

TEXTURE:
Grippy dimpled texture

COLOR:
Black and Grey



FF-SMWB-S6-620

Soft Medicine Wall Ball Set of 6 (6 to 20 lbs)

LENGTH:
13.7" (35 cm)

WIDTH:
13.7" (35 cm)

HEIGHT:
13.7" (35 cm)

COLOR:
Black and Grey

MATERIAL:
Soft and comfortable PU

PRODUCT WEIGHT:
6, 8, 10, 14, 16, 20 lb - total 74 lbs

TEXTURE:
Soft



FF-SMWB-S10-430

Soft Medicine Wall Ball Set of 10 (4 to 30 lbs)

LENGTH:
13.7" (35 cm)

WIDTH:
13.7" (35 cm)

HEIGHT:
13.7" (35 cm)

COLOR:
Black and Grey

MATERIAL:
Soft and comfortable PU

PRODUCT WEIGHT:
4, 6, 8, 10, 12, 14, 16, 20, 25, 30 lb - total 145 lbs

SURFACE:
Soft

FF-MSWB-S10-625



Soft Medicine Wall Ball Set of 10 (6 to 25 lbs) w/Rack

MATERIAL:
Soft and comfortable PU

DIMENSIONS:
13.7" x 13.7" x 13.7" (35 cm, 35 cm, 35 cm)
French Fitness 3 Tier Medicine & Slam Ball Rack - 60" x 20" x 38" (152 cm, 52 cm, 96 cm)

PRODUCT WEIGHT:
6, 8, 10, 12, 14 (2), 16, 20 (2), 25 lb - total 145 lbs

SURFACE:
Soft

COLOR:
Black and Grey

FF-GB



Anti Burst Stability Exercise Ball

MATERIAL:
Extra Thick PVC

DIAMETERS:
17.7" (45 cm) / 21.6" (55 cm) / 25.5" (65 cm) / 29.5" (75 cm)

TEXTURE:
Non-slip matte

COLOR:
Grey; Green/Blue; Blue/Purple; Black/Green

FF-GB195



Anti Burst Stability Exercise Ball Set of 3 (55 to 75 cm)

MATERIAL:
Extra Thick PVC

TEXTURE:
Non-slip matte

DIAMETERS:
21.6" (55 cm)
25.5" (65 cm)
29.5" (75 cm)

COLOR:
Green/Blue/Black

FF-GB240



Anti Burst Stability Exercise Ball Set of 4 (45 to 75 cm)

MATERIAL:
Extra Thick PVC

TEXTURE:
Non-slip matte

DIAMETERS:
17.7" (45 cm)
21.6" (55 cm)
25.5" (65 cm)
29.5" (75 cm)

COLOR:
Grey/Blue/Purple/Green

FF-BCSD



33cm Balance Cushion / Stability Disc

MATERIAL: PVC

DIAMETER: 12.9" (33 cm)

COLOR: Blue

FF-MWB30



Medicine Wall Ball 30 lb

MATERIAL: Soft and comfortable PU

TEXTURE: Soft and comfortable PU

COLOR: Black

WEIGHT: 30 lb (13.6 kg)

FF-HBBT



Half Ball Balance Trainer w/ Resistance Bands

MATERIAL Latex-free and anti-burst material

LENGTH 22.8" (58 cm) **WIDTH** 22.8" (58 cm)

HEIGHT 9.8" (25 cm) **WEIGHT** 10 lb (4.5 kg)

FRONT TEXTURE Anti-slide base and anti-skid

REVERSE TEXTURE Wear-resistant ABS base plus 6 anti-skid feet and anti-burst technology

COLOR Grey

FF-LB



Lacrosse Ball

MATERIAL Silica gel with solid molded rubber core

DIAMETER 2.5" (6.5cm)

WEIGHT 0.34 lb (0.15 kg)

TEXTURE Heat and abrasion resistant

COLOR Red

FF-LB5

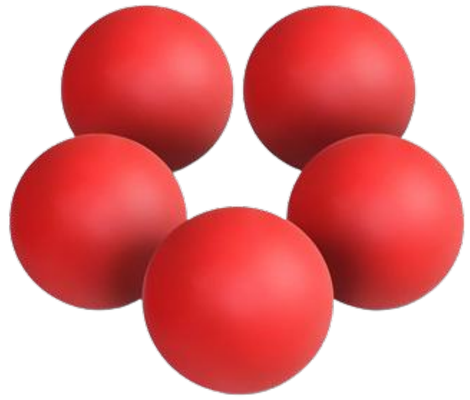

Lacrosse Ball Set of 5

MATERIAL Silica gel with solid molded rubber core

DIAMETER Each ball - 2.5" (6.5cm)

WEIGHT 0.34 lb (0.15 kg)

TEXTURE Heat and abrasion resistant

COLOR Red



FF-18BFR

18" Black Foam Roller

LENGTH:
18" (45 cm)

DIAMETER:
6" (15 cm)

MATERIAL:
Expanded Polypropylene

WEIGHT:
0.2 lb (0.09 kg)



FF-36BFR

36" Black Foam Roller

LENGTH:
36" (90 cm)

DIAMETER:
6" (15 cm)

MATERIAL:
Expanded Polypropylene

WEIGHT:
0.2 lb (0.09 kg)



FF-36FR

36" EVA Foam Roller

LENGTH:
36" (90 cm)

DIAMETER:
5.75" (14.61 cm)

MATERIAL:
High density EVA material

WEIGHT:
0.2 lb (0.09 kg)



FF-MSFR10

Massage Stick Foam Roller

LENGTH:
17.3" (44 cm)

DIAMETER:
1.8" (4.8 cm)

MATERIAL:
TPR anti-slip mat and steel tube shaft center

WEIGHT:
0.66 lbs (0.3 kg)



FF-LMA10

Landmine - Rack or Floor Mounted

LENGTH: 11" (27.94 cm)
MATERIAL: Steel
WIDTH: 5" (12.7 cm)
WEIGHT: 8.48 lbs (3.84kg)
HEIGHT: 6" (15.24 cm)



FF-LMA20

T-Bar Row & Landmine Combo

LENGTH: 18.7" (47.5 cm)
MATERIAL: Steel
WIDTH: 11.8" (30 cm)
WEIGHT: 12.2 lbs (5.5kg)
HEIGHT: 9.6" (24.5 cm)



FF-LMA100

Multi Functional T-Bar Landmine System

LENGTH: 32.67" (83 cm)
MATERIAL: Steel
WIDTH: 22.83" (58 cm)
WEIGHT: 617.29 lbs (280kg)
HEIGHT: 10.63" (27 cm)



FF-LMA30

Olympic Plate Mounted Post Landmine

LENGTH: 16.14" (41 cm)
MATERIAL: Steel
WIDTH: 3.15" (8 cm)
WEIGHT: 19.84 lbs (9kg)
HEIGHT: 2.17" (5.5 cm)



FF-TBH40

T-Bar Row Multi Grip Handle

LENGTH:
25.8" (65.6 cm)

MATERIAL:
Steel

WIDTH:
15.3" (39.1 cm)

WEIGHT:
13.23 lbs (6kg)

HEIGHT:
6" (15.4 cm)



FF-TBL10

360 Degree T-Bar Row Landmine

LENGTH:
19.3" (49.02 cm)

MATERIAL:
Steel

WIDTH:
16.1" (40.89 cm)

WEIGHT:
27.25 lbs (12.36 kg)

HEIGHT:
5.25" (13.34 cm)

FF-TBH10



31" T-Bar Row Handle

LENGTH:
31"L (78.74 cm)

DIAMETERS:
50.68mm opening for 2" Olympic bar
25.44mm opening for 1" Olympic bar

MATERIAL:
Steel

WEIGHT:
4.5 lbs (2.04kg)

FF-WBB



Weighted Body Fitness Bar

MATERIAL:
Pure iron, PU foam

RACK DIMENSIONS:
16"D x 14"W x 46.6"H
Fits 24 bars

COLORS:
Gray/ Pink/ Orange/ Black/ Burgundy/ Green

DIMENSIONS:
For 3 to 27 lbs: 48.2"L, 1" (3 cm)D
For 30 lbs: 60"L, 1.75"D
For 36 lbs: 72"L, 1.72"D

WEIGHT SINGLE:
3/6/9/12/15/18/21/24/27/30/36 lbs

FF-WBB-SET



Weighted Body Fitness Bar – Set

MATERIAL:
Pure iron, PU foam

RACK DIMENSIONS:
16"D x 14"W x 46.6"H
Fits 24 bars

COLORS:
Gray/ Pink/ Orange/ Black/ Burgundy/ Green

DIMENSIONS:
For 3 to 27 lbs: 48.2"L, 1" (3 cm)D
For 30 lbs: 60"L, 1.75"D
For 36 lbs: 72"L, 1.72"D

WEIGHT SET:
Set of 9 (3-27 lbs)
Set of 9 (3-27 lbs) with Rack
Set of 11 (3-36 lbs)

FF-GT10



Gym Timer w/Remote

DIMENSIONS 28.5"L x 1.6"W x 6.3"H (72.5 cm x 4cm x 16 cm)

WEIGHT 6.2 lbs (2.8 kg)

FF-RSWB27



27" Rubber Squat Wedge Block

MATERIAL Solid Rubber Material

DIMENSIONS 27.6"L x 6.3"W x 2"H (70 cm x 16 cm x 5 cm)

WEIGHT 12 lbs (5.5 kg)

FF-GHR10



Glute Ham Roller Slider

MATERIAL Steel

DIMENSIONS 26"L x 12"W x 3"H (67cm x 31cm x 7.6cm)

FF-WSPA5



5 lb Weight Stack Plate Adapter

MATERIAL Solid steel core, Thick virgin rubber coating

DIMENSIONS 5"L x 4"W x 2.25"H (12.7 cm x 10.16 cm x 5.72 cm)

WEIGHT 5 lb (2.27 kg)

FF-GC



Gym Chalk - Set of 8

MATERIAL magnesium carbonate chalk

DIMENSIONS 8 Chalk Blocks

WEIGHT 56 grams (per block)

FF-WBB360



Anti-Slip Wooden Balance Board w/360 Degree Rotation

MATERIAL Wood **DIAMETER** 15.35" (39 cm)

OVERALL WIDTH (BOARD AND BASE) 3" (7.5 cm)

WEIGHT 24.25 lbs (11 kg)



FF-GT10S

Gym Timer w/Stand & Remote

ADJUSTABLE HEIGHT 37.4" to 78.7" (95 cm to 100 cm)

GYM TIMER DIMENSIONS 28.5"L x 1.6"W x 6.3"H 28.5"L x 1.6"W x 6.3"H (72.5 cm x 4 cm x 16 cm)

TRIPOD WEIGHT 4.8 lbs (2.2 kg)

GYM TIMER WEIGHT 6.2 lbs (2.8 kg)



FF-ASAR

Aerobic Step w/ Adjustable Risers

MATERIAL High Density PE material

PLATFORM SIZE 42.7"L x 16"W x 4"H

EACH RISER SIZE 15.7"L x 15.7"W x 4.1"H

WEIGHT CAPACITY 400lbs

COLOR available in 3 different colors: Black, Pink/Green, and Gray



FF-GCB

Gym Chalk Bag

DIAMETER 4" (10.5cm)

HEIGHT 7" (18.5cm)



FF-AWC10

Agility Workout Cones w/ Holder

MATERIAL Low density Poly Ethylene

DIMENSIONS 7.8"W x 1.9"H



FF-SAL-26

Speed & Agility Ladder - 26 ft

MATERIAL thermoplastic rubbers and nylon rope

DIMENSIONS 26 ft

FF-AW2



AW2 Ab Exercise Roller Wheel

MATERIAL high-quality plastic discs and steel shaft

DIMENSIONS 10"L x 8"W x 8"H (25.4cm x 20.32cm x 20.32cm)

WEIGHT 1.4 lbs (650g)

FF-PUS10



Push Up Bars - Set of 2

MATERIAL high-quality chrome plated steel

DIMENSIONS 15"L x 11"W x 13"H

WEIGHT 20.5 lbs (9.3kg)

FF-BTPS2



Bolt Together Parallette Set of 2

MATERIAL heavy-duty steel

DIMENSIONS 24.3"L x 14.8"W x 14"H (61.8 cm x 37.6 cm x 35.6 cm) each

WEIGHT 24.7 lbs (11.2 kg) (Pair)

FF-AW4



AW4 Ab Exercise Roller Wheel

WIDTH (WHEEL PORTION) 3.5 in (9 cm) **HEIGHT** 7.8 in (20 cm)

FF-WMPUB10



Wall Mounted Pull Up Bar

MATERIAL heavy-duty steel

DIMENSIONS 47"L x 33"W x 30"H (120cm x 84cm x 78cm)

WEIGHT 28.6 lbs (13kg)

FF-WMSBPBB



Wall Mounted Speed Bag Platform w/Boxing Bag

MATERIAL 11-gauge steel for frame **SPEED BAG COVER MATERIAL** Leather
SPEED BAG FILLING MATERIAL Gas / Inflatable **BLADDER MATERIAL** PVC
PLATFORM MATERIAL Woodboard **PLATFORM THICKNESS** 0.7" (1.8 cm)
PLATFORM DIAMETER 23.6" (60 cm) **PLATFORM WEIGHT** 11.7 lbs (5.3 kg)
PRODUCT WEIGHT 26 lbs (11.8 kg)

FF-PSH10



Power Sled Harness

MATERIAL premium nylon material
DIMENSIONS 24"L x 9.4"W x 25.1"H (61 cm x 24 cm x 64 cm)
WEIGHT 24.2 lbs (11 KG)

FF-HPB100-V2



V2 Heavy Punching Bag, 100 lb

MATERIAL High quality leather, Hard resistant nylon straps
HEIGHT 47.2" (120cm) **DIAMETER** 13.7" (35cm) **WEIGHT** 100 lbs (45.36 kg)

FF-HPB100



Heavy Punching Bag, 100 lb

MATERIAL Ultra durable PVC,
Ultra durable PVC,
DIMENSIONS 70" x 15" x 15"
DIAMETER 15 in (38 cm)
WEIGHT 100 lbs

FF-HH10



Head Harness Neck Exerciser

MATERIAL Made from EVA materials **HEAD FOAM THICKNESS** .19" (5mm)
NYLON 6.3" (16cm) **VELCO AREA** 5.1"L x 2.3"W (13cm x 6cm)
ADJUSTABLE LENGTH 22.8" to 25.5" (58cm to 65cm)

FF-BDPB-BLUE



Boxing Dummy Punching Bag Man Free Standing

MATERIAL Silicone
DIMENSIONS 25.6"L x 25.6"W x 67"H (65 cm x 65 cm x 170 cm)
WEIGHT 66.13 lbs (30 kg)

FF-NWLB



EVA Nylon Weightlifting Belt

DIMENSIONS 37.4"L x 5.9"W (95cm x 15cm)

WEIGHT CAPACITY 50 lbs (23 KG)

FF-WC44



Heavy Weight Lifting Chain Set of 2 w/Collars - 44 lbs

CHAIN SIZE 20 mm

WEIGHT 2 chains (22 lbs each) = 44 lbs

FF-LWLB



Leather Weight Lifting Belt

MATERIAL Leather **DIMENSIONS** 45" (115 cm)

WEIGHT 1.2 lbs (.55 kg)

FF-BWLB



PU Polyurethane Weight Lifting Belt - Large

MATERIAL PU Leather

DIMENSIONS 51.2"L x 4.3"W (130cm x 11cm)

FF-WC22



Weight Lifting Chain Set of 2 w/ Collars - 22 lbs

MATERIAL steel **CHAIN SIZE** 9 mm

WEIGHT 2 chains (11 lbs each) = 22 lbs

FF-WWS10



Weight Lifting Wrist Straps

MATERIAL cotton and neoprene

DIMENSIONS 22.8"L x 1.3"W (58cm x 3.5cm)

WEIGHT 11 lbs (0.5kg)

FF-PBBP



Polyurethane Barbell Bar Pad

MATERIAL Waterproof PU leather shell

CIRCUMFERENCE 3.15 in (80 mm)

LENGTH 15.7 in (40 cm)

FF-FSBP



Foam Squat Bar Pad w/Strap

MATERIAL EVA foam pad

FOAM THICKNESS 1.4" (3.5 cm)

LENGTH 17.5" (44.5 cm)

WEIGHT 0.50 lbs (230 g)

FF-WSPA25



2.5 lb Weight Stack Plate Adapter

MATERIAL Solid steel core, Thick virgin rubber

DIMENSIONS 5"L x 4"W x 1.5"H (12.7 cm x 10.16 c

WEIGHT 3 lbs (1.36 kg)

FF-OWA14



Olympic Weight Adapter Sleeve 14"

DIMENSIONS 14"L x 2"W x 2"H (35.56cm x 5.08 cm x 5.08cm)

WEIGHT 1 lb (0.45 kg)

FF-MBR500



French Fitness MBR500 Medicine Ball Rebounder

MATERIAL 14 Gauge Steel

DIMENSIONS 47.9"L x 40.7"W (121.7 cm x 103.4 cm)

FF-OWA8



OWA8 Olympic Weight Adapter Sleeve 8"

DIMENSIONS 8"L x 2"W x 2"H (20.32cm x 5.08cm x 5.08cm)

WEIGHT 1 lb (0.45 kg)

FF-DBJ10



Deadlift Bar Jack

MATERIAL 11 Gauge Steel

DIMENSIONS 43.3"L x 19.2"W x 35.8"H (110cm x 49cm, 91cm)

WEIGHT 28 lbs