This addendum accompanies your equipment documentation and is additional information concerning the heart rate features for your equipment and console.

Important

The heart rate features are intended for reference only. They may not be accurate for every user or at every speed and are not intended for use as a medical device. Holding the heart rate handle touch sensor while exercising at higher intensity may also decrease accuracy of the heart rate reading and is not recommended. Please also read your product documentation and visit:
www.precor.com/en-us/customer-service/faq.

P/N 305324-101 rev A, ENU
©Precor Incorporated | October 2017

Product Owner's Manual

100i

Commercial Adaptive Motion Trainer

PRECOR® USA
move beyond®

Important Safety Instructions

When using Precor equipment, always take basic precautions, including the following:

- Read all instructions before using the equipment. These instructions are written to educate patrons and other users in the proper use of the equipment.
- Other sections in this manual provide more details of safety features. Be sure to read these sections and observe all safety notices.
- Before beginning any fitness program, make sure all users see a physician for a complete physical examination.

  Il est conseillé de subir un examen médical complet avant d'entreprendre tout programme d'exercise. Si vous avez des étourdissements ou des faiblesses, arrêtez les exercices immédiatement.

DANGER **Before cleaning it, always unplug the equipment from its power source to reduce the risk of electric shock. Before cleaning self-powered equipment, disconnect the optional power adapter.**

WARNING *To reduce the risk of burns, fire, electric shock, or injury, take the following precautions:*

- Do not allow children or people unfamiliar with its operation on or near the equipment. Do not leave children unsupervised around the equipment.
- Never leave the equipment unattended when it is plugged in. Unplug the equipment from the power source when it is not in use, before cleaning it, and before providing authorized service.

  Note: The optional power adapter is considered an electrical power source for self-powered equipment.
- Keep all electrical components away from liquids to prevent shock.
- Assemble and operate the equipment on a solid, level surface. Locate the equipment a few feet from walls or furniture.
- Maintain the equipment in good working condition. Refer to *Maintenance*.
- If you plan to move the equipment, obtain help and use proper lifting techniques. For more information, refer to *Moving the Equipment*.
- Use the equipment only for its intended purpose as described in this manual. Do not use accessory attachments that are not recommended by the manufacturer, as such attachments may cause injuries.
- Never operate the equipment if it is damaged, not working properly, when it has been dropped, or has been immersed in water. Return the equipment to a service center for examination and repair.
- Keep the power cord or optional power adapter and plug away from heated surfaces.

- Do not operate the equipment where aerosol (spray) products are being used or where oxygen is being administered.
- Do not use outdoors.
- Do not attempt to service the equipment yourself except to follow the maintenance instructions found in this manual.
- Never drop or insert objects into any opening. Keep hands away from moving parts.
- Do not set anything on the stationary handrails or handlebars, display console, or covers. Place liquids, magazines, and books in the appropriate receptacles.

Safety Approval

When identified with the ETL-c logo, the equipment has been tested and conforms to the requirements of CAN/CSA-E-335-1/3-04, EN 60335-1: 2002 Safety of Household and Similar Electrical Appliances. This equipment is a Class S/B or C certified machine according to applicable EN957 standards.

Educating Users

Take time to educate users on the safety instructions found in both the *User's Reference Manual* and *Product Owner's Manual*. Explain to your club or facility patrons that they should:

- Hold onto a stationary handrail or handlebar while stepping onto the equipment or when getting comfortably seated on the cycle.
- Face the display at all times.
- Hold on to a stationary handrail or handlebar with one hand whenever reaching with the other hand to touch the display keys.

Hazardous Materials and Proper Disposal

The self-powered equipment has an internal battery which contains materials that are considered hazardous to the environment. Proper disposal of the battery is required by federal law.

If you plan to dispose of your equipment, contact Precor Commercial Products Customer Support for information regarding battery removal. Refer to *Obtaining Service*.

Product Recycling and Disposal

This equipment must be recycled or discarded according to applicable local and national regulations.

Product labels, in accordance with European Directive 2002/96/EC concerning waste electrical and electronic equipment (WEEE), determine the framework for the return and recycling of used equipment as applicable throughout the European Union. The WEEE label indicates that the product is not to be thrown away, but rather reclaimed upon end of life per this Directive.

In accordance with the European WEEE Directive, electrical and electronic equipment (EEE) is to be collected separately and to be reused, recycled, or recovered at end of life. Users of EEE with the WEEE label per Annex IV of the WEEE Directive must not dispose of end of life EEE as unsorted municipal waste, but use the collection framework available to customers for the return, recycling, and recovery of WEEE. Customer participation is important to minimize any potential effects of EEE on the environment and human health due to the potential presence of hazardous substances in EEE. For proper collection and treatment, refer to *Obtaining Service*.

Radio Frequency Interference (RFI)

Federal Communications Commission, Part 15

This equipment has been tested and found to comply with the limits for a Class A digital device, pursuant to Part 15 of the FCC Rules. These limits are designed to provide reasonable protection against harmful interference in a commercial installation. The equipment generates, uses, and can radiate radio frequency energy and, if not installed and used in accordance with the owner's manual instructions, may cause harmful interference to radio communications.

WARNING *Per FCC rules, changes or modifications not expressly approved by Precor could void the user's authority to operate the equipment.*

Industry Canada

This Class A digital apparatus complies with Canadian ICES-003.

Cet appareil numérique de la classe A est conforme à la norme NMB-003 du Canada.

ATTENTION: Haute Tension
Débranchez avant de réparer

European Applications

This product is compliant to:

- 2004/108/EC Electromagnetic Compatibility Directive.
- 2006/95/EC Low Voltage Directive.
- 2002/95/EC Restriction of Hazardous Substances Directive.

This product conforms to the requirements of the European Council Directive 89/336/EEC, 2004/108/EC Electromagnetic Compatibility and has been tested to the following standards:

- EN55022, Limits & Methods of Measurement of Radio Interference, Information Technology Equipment.
- EN55024, Immunity of Information Technology Equipment.

This product also conforms to the requirements of the European Council Directive 73/23/EEC, 2006/95/EC Low Voltage Directive and has been tested to the following standard:

- IEC 335-1, EN60335-1 Safety of Household and similar Electrical Appliances.

Obtaining Service

You should not attempt to service the equipment except for maintenance tasks described in this manual. For information about product operation or service, see the Precor web site at www.precor.com. Should you need more information regarding customer support numbers or a list of Precor authorized service centers, visit the Precor web site at www.precor.com/corp/contact.

For future reference, write the model, serial number, and date of purchase for all your equipment in the space provided. The serial number is printed on a label located near the power cord connection (treadmills) or receptacle (self-powered equipment).

Model #: _____ Base Serial #: _____

Display Serial #: _____

Date purchased: _____

Model #: _____ Base Serial #: _____

Display Serial #: _____

Date purchased: _____

Model #: _____ Base Serial #: _____

Display Serial #: _____

Date purchased: _____

Model #: _____ Base Serial #: _____

Display Serial #: _____

Date purchased: _____

Table of Contents

Important Safety Instructions.....1
Safety Approval 2
Educating Users 2
Hazardous Materials and Proper Disposal 2
Product Recycling and Disposal 2
Radio Frequency Interference (RFI) 3
European Applications 3
Obtaining Service 4

AMT Safety Features.....6

Self-Powered Features.....7
Informational Displays Prior to Shutdown..... 7
Symptoms of a Low Battery..... 8
Using the Optional Power Adapter..... 8
The Optional Power Adapter Kit..... 9
Replacing the Battery..... 9

Club Features.....10
Club Programming Tips..... 10
Accessing Club Programming Mode and Changing the Settings..... 11
Choosing a Language..... 13
Selecting a U.S. Standard or Metric Display..... 13
Setting an Exercise Session Time Limit..... 13
Setting a Pause Time Limit..... 14
Setting a Cool-Down Time Limit 14
Informational Displays..... 15
User ID Entry with CSAFE Equipment..... 18

Maintenance.....19
Daily Inspection 19
Daily Cleaning..... 19
Moving the Equipment..... 19
Storing the Chest Strap 20
Long-Term Storage 20

Precor Commercial Equipment Limited Warranty.....21

AMT Safety Features

Before allowing users on Precor equipment, review the safety instructions found at the beginning of this manual. You should also teach your patrons how to safely use the equipment. Explain to your patrons that they should:

- Stand on the rear pedestal and grasp an arm or a stationary handlebar for stability when preparing to step on or off the equipment.
- Hold on to a stationary handlebar with one hand whenever reaching with the other hand to touch the display keys.
- Stay clear of the foot plates and rear pedestal when someone is using the equipment.

Self-Powered Features

On self-powered equipment, the battery initializes and displays the Precor banner when a user starts exercising. A minimum rate of motion must be maintained for the banner to appear, as shown in the following table. When a person meets the requirements, the power that is generated allows the equipment to function properly.

Table 1. Minimum requirements for operation

Equipment	***Rate of Motion***
AMT	56 strides per minute (SPM)
EFX	40 strides per minute (SPM)
Climber	30 steps per minute
Cycle	20 revolutions per minute (RPM)

Informational displays appear when the battery is low or when the rate of motion drops below the minimum requirements. The display explains what to do to retain power. If the messages are ignored, the equipment begins shutdown procedures to maintain the charge of the battery. Refer to *Informational Displays Prior to Shutdown*.

An optional power adapter can be purchased and provides sustained power to the equipment. If you plan to change the club settings, the power adapter is highly recommended. To purchase the optional power adapter, check with your dealer. Refer to *Obtaining Service*.

Informational Displays Prior to Shutdown

The equipment saves its battery charge by moving into a shutdown mode. If the user does not maintain the minimum rate of motion, a 30-second shutdown process begins.

Dots appear in the display and all key presses are ignored. If no movement is detected or the rate of motion remains below the minimum, the dots steadily disappear as the countdown continues.

Note: The user can resume exercising if he or she begins before the countdown period elapses.

Important: *If the equipment is connected to a CSAFE master device, a slightly different scenario occurs. When ten seconds remain before the equipment shuts off, the exercise session ends. RESETT/NG appears in the display while the equipment disconnects from the CSAFE master device. All key presses are ignored.*

Symptoms of a Low Battery

If no one has used the equipment for an extended period of time, the battery may need recharging.

Symptoms of a low battery include:

- A flickering or erratic display
- User and program information is lost once the user stops exercising. No workout summary or notification of pending shutdown occurs.

Important: *To maintain a constant power source, use the optional power adapter.*

Using the Optional Power Adapter

After connecting the power adapter to the equipment, plug the opposite end into the appropriate power source 120 V or 240 V.

CAUTION: When the optional power adapter is in use, make sure that the power supply cord does not create a safety hazard. Keep it out of the way of traffic and moving parts. If the power supply cord or power conversion module is damaged, it must be replaced.

The display functions differently when the power adapter is connected. Because the power adapter provides a constant source of power, a user can pause for brief periods without initiating shutdown procedures. When the pause time limit expires and the user has not resumed exercising, the display returns to the Precor banner. Refer to *Setting a Pause Time Limit*. To learn how to install the power adapter, refer to *The Optional Power Adapter Kit*.

The Optional Power Adapter Kit

If you purchase the optional power adapter, you must also purchase the internal cable kit. The kit supplies the cable, bracket, and fasteners that connect the power adapter to the lower electronics board.

CAUTION: The internal cable kit must be installed by authorized service personnel. Do not attempt installation on your own as you could void the Precor Limited Warranty. For more information, refer to *Obtaining Service*.

Once the internal cable kit is installed, you can plug the optional power adapter into the equipment. Plug the opposite end into the appropriate power source for your equipment 120 V or 240 V. Review the safety instructions found at the beginning of this manual before using the power adapter.

Replacing the Battery

The equipment's battery is built to last for a long time. However, if you feel that the battery may need replacing, check with an authorized service technician. Refer to *Obtaining Service*.

CAUTION: The battery stored inside the equipment contains hazardous materials and must be disposed of according to Hazardous Waste Regulations. Refer to *Hazardous Materials and Proper Disposal*.

Club Features

These next few pages explain how to customize the equipment for your club or facility and view useful product information. All these features remain hidden to the patrons and can only be accessed using special key presses. Read this section if you want to:

- Change the display to a different language
- Change the display to show U.S. standard or metric measurements
- Set the maximum exercise and pause times
- Set a cool-down time limit
- View the odometer
- Display the number of hours the equipment has been in use
- View the software versions and part numbers
- Display the serial number
- Check the program usage and error logs

  Note: To review the club programming prompts and factory default settings that can be changed through club programming mode, refer to the following table.

Club Programming Tips

- Always start at the Precor banner.
- Electrical power must be supplied. For self-powered equipment, a constant power source is available if you use the optional power adapter, otherwise you will have to maintain the minimum rate of motion. Refer to *Self-Powered Features*. If you plan to program self-powered equipment, purchasing the optional power adapter is highly recommended.

  Note: If you do not use the optional power adapter during club programming mode, and the rate of motion falls below the minimum requirements, no warning is given when the equipment moves into its 30-second shutdown procedure.
- The club programming mode is accessed by pressing the RESET key at the Precor banner. The remaining key presses must occur quickly and without pause.

  Note: Keys that can be used interchangeably in club programming mode are OK and ENTER.
- The changes made in club programming mode become the default settings whenever the display resets to the Precor banner.

Table 2. Club custom features and settings

Club Programming Prompt	***Factory Default Setting***	***Changes you can make***
SELECT LANGUAGE	English	Several languages affect the display prompts. Choose one.
SELECT UNITS	U.S.	Two standard units of measure affect the display prompts. Choose between U.S. or Metric.
SET MAX WORKOUT TIME	60 minutes	Exercise session time limits range from 1 to 240 minutes. NO LIMIT is accessible beyond 240 minutes.
SET MAX PAUSE TIME	120 seconds	Pause time limits range from 1 to 120 seconds (2 minutes). Restrictions exist for self-powered units.
SET COOL DOWN TIME	5 minutes	Cool-down time limits range from 0 to 5 minutes.

Note: If a user changes the language or unit of measure during an exercise session, the display resets to the club preferences when a user's workout ends.

Accessing Club Programming Mode and Changing the Settings

Read the *Club Programming Tips* to identify useful information about customizing your Precor equipment.

To access the available menus and change the program settings, perform the following steps:

1. At the Precor banner, press the following keys in sequence without pausing between selections:

   RESET, 5, 6, 5, 1, 5, 6, 5

   The club programming prompts appear sequentially and in a menu format. The following table describes which keys to use in club programming mode.

Table 3. Club Programming Mode keys

Key	***Description***	***Function***
▲ or ▼	Navigational arrow keys	Moves you through the programs and selections.
OK	OK key	Lets you choose or accept the displayed selection.
CLEAR	Number keypad CLEAR key	Returns to the previous menu level without saving any changes.
RESET	RESET key	Exits Club Programming Mode and returns to the Precor banner.

Note: The number keypad is disabled once you enter club programming mode.

Use the following flowchart to navigate through the menu settings.

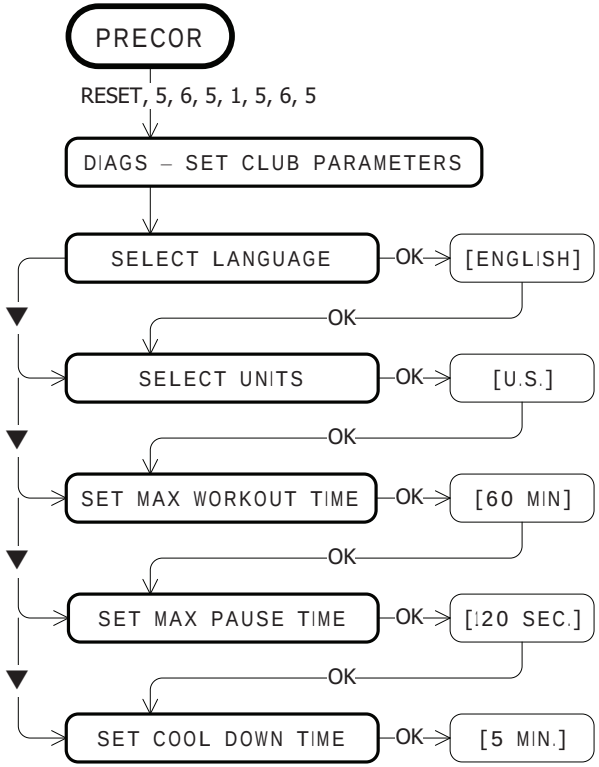

Choosing a Language

The equipment can display user prompts, text, and user entries in several different languages. When the equipment is shipped from the factory, it is set to display English.

Note: Programming prompts are not affected by language selection. The prompts in this section continue to appear in English.

1. At the SELECT LANGUAGE prompt, press OK. Use the navigational arrow keys to choose a language.
2. When you are ready, press OK to accept the displayed setting and move to the next feature. For other options, refer to the table in *Accessing Club Programming Mode and Changing the Settings*.

Selecting a U.S. Standard or Metric Display

The equipment can display measurements in either Metric or U.S. Standard. The default factory setting is to display U.S. Standard. To change this setting, perform the following steps:

1. At the SELECT UNITS prompt, press OK. Use the navigational arrow keys to select a unit of measure (US or METRIC).
2. When you are ready, press OK to accept the displayed setting and move to the next feature. For other options, refer to the table in *Accessing Club Programming Mode and Changing the Settings*.

Setting an Exercise Session Time Limit

You can limit how long a user can exercise on the equipment. For example, if you set the time limit to 20 minutes, users can only enter a session time between 1 and 20 minutes.

Note: The automatic cool-down period is appended to the end of any time-based program, so adjust the time limit accordingly.

You can also let a user exercise indefinitely by selecting NO LIMIT. However, you will need to instruct users that once they select a program, they must press the TIME +/- key. A workout time blinks in the display. They need to use the Number Keypad to type in 240, press the up arrow key to display NO LIMIT, and then press OK.

The exercise session times available are between 1 and 240 minutes.

1. At the SET MAX WORKOUT TIME prompt, press OK. Use the navigational arrow keys to change the displayed time limit.

   Note: When you press and hold a navigational arrow key, the number increments by five, for example, 1, 5, 10, 15, 20. When you tap an arrow key, the number increments by one.
2. When you are ready, press OK to accept the displayed setting and move to the next feature. For other options, refer to the table in *Accessing Club Programming Mode and Changing the Settings*.

Setting a Pause Time Limit

You can limit how long a user can pause while exercising on the equipment by entering a time between 1 and 120 seconds (two minutes). For example, if you set a pause time limit of 60 seconds, the display automatically resets to the Precor banner if no movement is detected and no key press occurs for one minute.

Important: *The optional power adapter must be connected on self-powered equipment to establish a definitive pause time limit. If the optional power adapter is not attached and the rate of motion drops below the minimum requirements, the equipment begins its 30-second shutdown, effectively eliminating pause mode. Refer to the table in* Self-Powered Features.

1. At the SET MAX PAUSE TIME prompt, press OK. Use the navigational arrow keys to change the time limit. Choose between 1 and 120 seconds (two minutes).
2. When you are ready, press OK to accept the displayed setting and move to the next feature. For other options, refer to the table in *Accessing Club Programming Mode and Changing the Settings*.

Setting a Cool-Down Time Limit

You can limit how long a user cools down after exercising on the equipment by entering a time between 0 and 5 minutes.

Important: *It is highly recommended that you set the cool-down period at or above three minutes. It takes time for a user's heart rate to return to a resting state after vigorous exercise. An effective cool-down period also reduces the amount of lactic acid in muscle tissue.*

1. At the SET COOL DOWN TIME prompt, press OK. Use the navigational arrow keys to display the available time limits. Choose between 0 and 5 minutes. The default setting is 5 minutes.
2. When you are ready, press OK to accept the displayed setting and move to the next feature. For other options, refer to the table in *Accessing Club Programming Mode and Changing the Settings*.

Informational Displays

The equipment provides information about its use (odometer and hour meter), as well as software versions and part numbers, serial number, usage log, and error log. In general, you would only access this information if directed to do so by Precor Customer Support.

To navigate through the informational displays, use the following flowchart. Descriptions for these displays are shown in the following table.

Note: The CLEAR key is located on the Number Keypad and the RESET key is located on the Navigational Keypad.

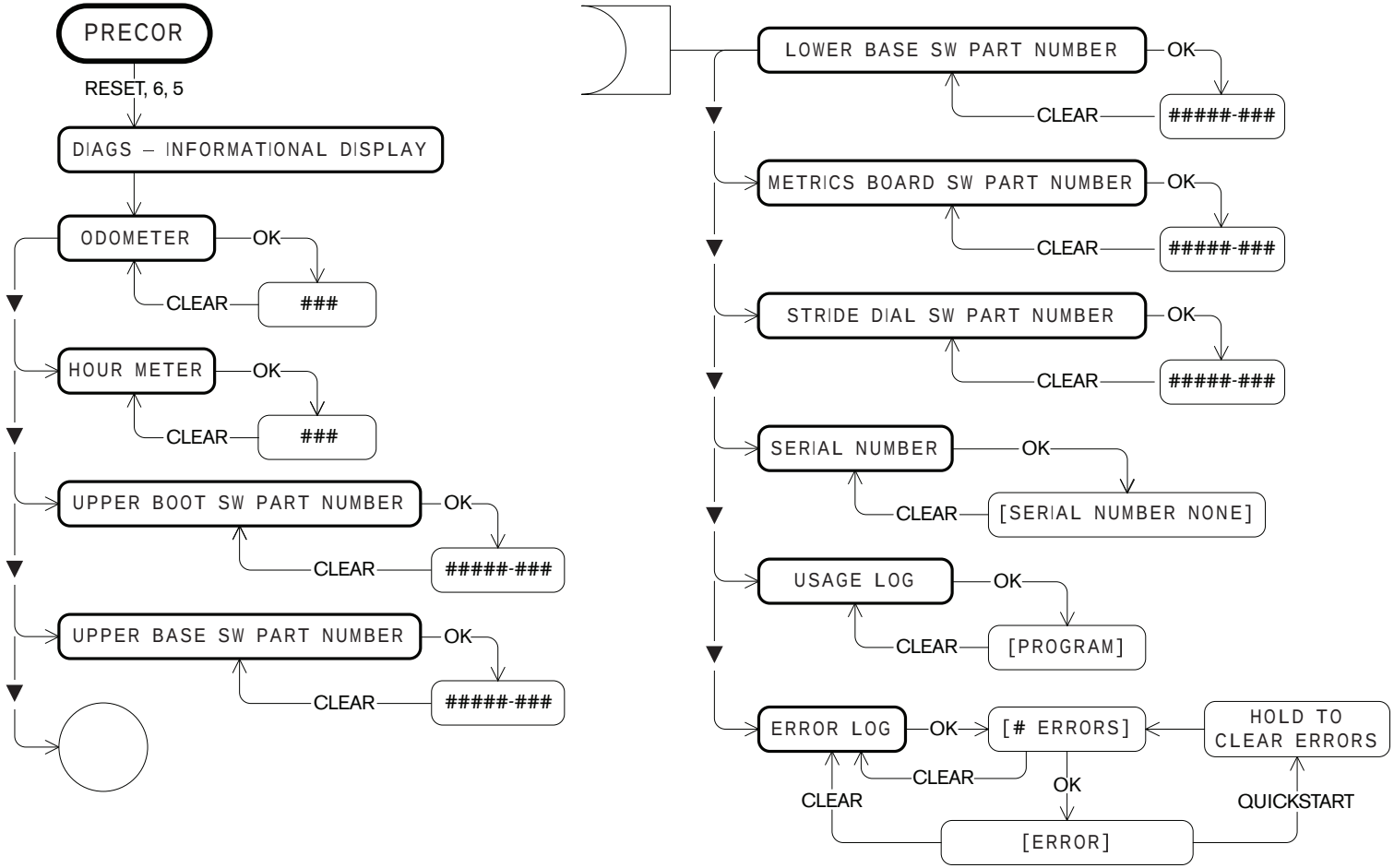

Table 4. Informational Displays

Product	***Display***	***Description***
All	ODOMETER	The odometer value correlates to the type of Precor product and the standard of units, U.S. or Metric, selected in the club programs. Treadmill shows the number of cumulative miles or kilometers logged to date. EFX or AMT shows the number of total strides logged to date. Cycle shows the number of total revolutions logged to date. Climber indicates the number of floors climbed.
All	HOUR METER	The number of hours that the equipment has been in use. The equipment tracks the elapsed minutes, but the value that appears is truncated to the nearest full hour.
All	U-BOOT SW	Upper board application software part number and version. **Note:** Some displays show UPPER BOOT SW PART NUMBER.
All	U-BASE SW	Upper base application software version. **Note:** Some displays show UPPER BASE SW PART NUMBER.
All	LOWER SW	Lower application software version. **Note:** Some displays show LOWER BASE SW PART NUMBER.
534i, 532i, AMT	METRICS BOARD SW PART NUMBER	Metrics board software part number and version.
AMT	STRIDE DIAL SW PART NUMBER	Stride dial software part number.
All	SER. NUMBER	The serial number is helpful when you contact Customer Support. You can also find the serial number located on a label on the front hood (treadmills) or optional power receptacle (self-powered equipment) if one does not appear in the display. **Note:** Some displays show SERIAL NUMBER.
All	USAGE LOG	The software logs the number of times each program has been used and displays the associated cumulative minutes. The usage log is helpful in determining user preferences in program selection.
All	ERROR LOG	The error log displays any error codes that may have been detected by the software. Copy the error code information to paper so you can provide it to Customer Support, if needed. Be sure to copy it exactly as shown. Refer to *Error Log*.

Error Log

Quick access to the informational display is available if error messages have appeared on the display and have been recorded in the error log. This feature is usually reserved for service personnel. At the Precor banner, press and hold RESET for 4 seconds. If DIAGS - INFORMATION DISPLAY or ERROR LOG appears, press OK.

If no errors are logged, STOP KEY or STUCK KEY appears. When you release the key, the Precor banner returns.

Erasing the Error Log

When you no longer need the error log information, you may erase all entries in the error log by pressing the QUICKSTART key while any error description is scrolling across the display. Continue to maintain light pressure on the key until the message, HOLD TO CLEAR ERRORS, scrolls off the display. When the key is released, NO ERRORS appears on the display, which indicates the error log has been deleted.

Important: *You cannot retrieve the error log once you have deleted it. You may want to resolve any issues you are experiencing with the equipment before erasing the error log.*

When you are ready, press RESET to return to the Precor banner.

User ID Entry with CSAFE Equipment

The equipment is fully compatible with CSAFE protocols. When the equipment is connected to a CSAFE master device, the user is prompted to press ENTER and begin an identification process.

The user ID is displayed as five zeros and indicates the starting point. The following table describes key functions while in CSAFE mode.

Table 5. CSAFE access keys

Keypad	***Description***
Number keypad	Use the number keys to enter a user ID. The number that is pressed appears on the right. As the user continues, the numbers fill in the display from right to left. When all five numbers are in place, the user must press ENTER or OK to submit the user ID.
CLEAR or BACK	Erases individual numbers in the user ID from right to left.
ENTER or OK	Submits the user ID. **Note:** User ID entry is bypassed when the user enters five zeros. No workout statistics are recorded.
RESET or PAUSE/RESET	Resets the display to the banner.

A message appears on the display and indicates when the user ID is accepted by the CSAFE master device. Once program selection is complete, the user can begin exercising.

To review information about CSAFE specifications, visit the web site at: www.fitlinxx.com/csafe

If you have questions or need technical support, refer to *Obtaining Service*.

Maintenance

It is important to perform the minor maintenance tasks described below. Failure to maintain the equipment as described in this section could void the Precor Limited Warranty.

DANGER **To reduce the risk of electrical shock, always unplug the equipment from its power source (an optional power adapter in the case of self-powered equipment) before cleaning it or performing any maintenance tasks.**

Daily Inspection

Look and listen for slipping belts, loose fasteners, unusual noises, worn or frayed power cords, and any other indications that the equipment may be in need of service. If you notice any of these, obtain service.

Important: *If you determine that the equipment needs service, disconnect any power connections and move the equipment away from the exercising area. Place an OUT OF SERVICE sign on it and make sure all patrons and users know that they must not use the equipment.*

To order parts or to contact a Precor authorized service provider in your area, refer to *Obtaining Service*.

Daily Cleaning

Precor recommends the equipment be cleaned before and after each exercise session. Use mild soap and water to dampen a clean, soft cloth and wipe all exposed surfaces. This helps remove dust and dirt.

CAUTION: Do not use any acidic cleaners. Doing so will weaken the paint or powder coatings and void the Precor Limited Warranty. Never pour water or spray liquids on any part of the equipment. Allow the equipment to dry completely before using.

Frequently vacuum the floor underneath the equipment to prevent the accumulation of dust and dirt, which can affect the smooth operation of the equipment. Use a soft nylon scrub brush to clean the running belt on treadmills or the grooves on equipment with foot pedals.

Moving the Equipment

It is important, if you plan to move the equipment, that you obtain adult help and use proper lifting technique. The equipment is very heavy. Take advantage of the roller wheels on the equipment when moving it to a new location. Do not grasp any plastic parts while lifting or moving the equipment. The plastic parts are not structurally linked to the equipment and will break.

Storing the Chest Strap

If you purchased the optional heart rate chest strap, store it in a place where it remains free of dust and dirt (for example, in a closet or drawer). Be sure to protect the chest strap from extremes in temperature. Do not store it in a place that may be exposed to temperatures below 32° F (0° C).

To clean the chest strap, use a sponge or soft cloth dampened in mild soap and water. Dry the surface thoroughly with a clean towel.

Long-Term Storage

When the equipment is not in use for any length of time, make sure it is turned Off (treadmill only) and the power cord or optional power adapter (self-powered equipment) is unplugged from its power source and is positioned so that it will not become damaged or interfere with people or other equipment.

Precor Commercial Equipment Limited Warranty

PLEASE READ THESE WARRANTY TERMS AND CONDITIONS CAREFULLY BEFORE USING YOUR PRECOR INCORPORATED PRODUCT. BY USING THE EQUIPMENT, YOU ARE CONSENTING TO BE BOUND BY THE FOLLOWING WARRANTY TERMS AND CONDITIONS.

Limited Warranty.

Precor Incorporated warrants all new Precor products to be free from defects in materials and manufacture for the warranty periods set forth below. The warranty periods commence on the invoice date of the original purchase. This warranty applies only against defects discovered within the warranty period and extends only to the original purchaser of the product. Parts repaired or replaced under the terms of this warranty will be warranted for the remainder of the original warranty period only. To claim under this warranty, the buyer must notify Precor or your authorized Precor dealer within 30 days after the date of discovery of any nonconformity and make the affected product available for inspection by Precor or its service representative. Precor's obligations under this warranty are limited as set forth below.

Warranty Periods and Coverage.

Commercial Cardiovascular Products, also known as C-Series Products, (excluding StretchTrainer, Strength Products).

- Seven years frame, five years display face assembly, three years motor controller, one year durable wear parts, two years parts, one year labor.
- For treadmills, five years drive motor.
- For self-powered ellipticals and bikes, one year battery.
- For InSite, one year parts and labor.
- Labor coverage for options as defined below.

StretchTrainer

Five years frame, two years parts, 90 days upholstery, no labor.

Strength Products (S3.45 and S3.25 only)

Ten years frame; three years bearings, guide rods, cams, pulleys; one year belts, cables, hand grips, miscellaneous parts; 90 days upholstery; no labor.

Options / Accessories / Battery-powered or Self-Operated Devices

Many options or accessories have components that are connected internally or mounted inside the electronic console. The following guidelines determine the warranty for these components. If the internal components are installed by the factory or by an authorized dealer as part of the original sale and delivery, they have a warranty that is identical to the warranty of the equipment in which they are connected or mounted. If the internal components are not installed by the factory or by an authorized dealer as part of the original sale and delivery, they have a 90 days parts and labor limited warranty. All components that are not internally connected have a 90 days parts only limited warranty. Satisfactory proof of purchase is required in all cases.

Conditions and Restrictions.

This warranty is valid only in accordance with the conditions set forth below:

1. The warranty applies to the Precor product only while
   a. it remains in the possession of the original purchaser and proof of purchase is demonstrated,
   b. it has not been subjected to accident, misuse, abuse, improper service, or non-Precor modification.
   c. claims are made within the warranty period.
2. Certain products are warranted for standard commercial use only (defined as use in non-fee paying clubs or facilities and less than 6 hours daily use. Unapproved use voids the warranty. Current standard commercial products include C936i, C932i, EFX524i, EFX534i.).
3. This warranty does not cover damage or equipment failure caused by electrical wiring not in compliance with electrical codes or Precor owner's manual specifications, or failure to provide reasonable and necessary maintenance as outlined in the owner's manual.
4. Except in Canada, Precor does not pay labor outside the United States.
5. Warranties outside the United States and Canada may vary. Please contact your local Dealer for details.

This Limited Warranty shall not apply to:

1. Software (PROM) version upgrades.
2. Normal wear and tear, consumables and cosmetic items, including, but not limited to the following: grips, seats, and labels.
3. Repairs performed on Precor equipment missing a serial number or with a serial tag that has been altered or defaced.
4. Service calls to correct installation of the equipment or instruct owners on how to use the equipment.
5. Pickup and delivery involved with repairs.
6. Any labor costs incurred beyond the applicable labor warranty period.

Disclaimer and Release.

The warranties provided herein are the exclusive warranties given by Precor and supersede any prior, contrary or additional representations, whether oral or written. ANY IMPLIED WARRANTIES, INCLUDING THE WARRANTY OF MERCHANTABILITY OR FITNESS FOR A PARTICULAR PURPOSE THAT APPLY TO ANY PARTS DESCRIBED ABOVE ARE LIMITED IN DURATION TO THE PERIODS OF EXPRESS WARRANTIES GIVEN ABOVE FOR THOSE SAME PARTS. PRECOR HEREBY DISCLAIMS AND EXCLUDES THOSE WARRANTIES THEREAFTER. Some States do not allow limitations on how long an implied warranty lasts, so the above limitation may not apply to you. PRECOR ALSO HEREBY DISCLAIMS AND EXCLUDES ALL OTHER OBLIGATIONS OR LIABILITIES, EXPRESS OR IMPLIED, ARISING BY LAW OR OTHERWISE, WITH RESPECT TO ANY NONCONFORMANCE OR DEFECT IN ANY PRODUCT, INCLUDING BUT NOT LIMITED TO: (A) ANY OBLIGATION, LIABILITY, RIGHT, CLAIM OR REMEDY IN TORT, WHETHER OR NOT ARISING FROM THE NEGLIGENCE OF PRECOR OR ITS SUPPLIERS (WHETHER ACTIVE, PASSIVE OR IMPUTED); AND (B) ANY OBLIGATION, LIABILITY, RIGHT, CLAIM OR REMEDY FOR LOSS OF OR DAMAGE TO ANY EQUIPMENT. This disclaimer and release shall apply even if the express warranty set forth above fails of its essential purpose.

Exclusive Remedies.

For any product described above that fails to conform to its warranty, Precor will provide, at their option, one of the following: (1) repair; (2) replacement; or (3) refund of the purchase price. Precor Limited Warranty service may be obtained by contacting the authorized dealer from whom you purchased the item. Precor compensates Servicers for warranty trips within their normal service area to repair commercial equipment at the customer's location. You may be charged a trip charge outside the service area. THESE SHALL BE THE SOLE AND EXCLUSIVE REMEDIES OF THE BUYER FOR ANY BREACH OF WARRANTY.

EXCLUSION OF CONSEQUENTIAL AND INCIDENTAL DAMAGES.

PRECOR AND/OR ITS SUPPLIERS SHALL HAVE NO OBLIGATION OR LIABILITY, WHETHER ARISING IN CONTRACT (INCLUDING WARRANTY), TORT (INCLUDING ACTIVE, PASSIVE, OR IMPUTED NEGLIGENCE AND STRICT LIABILITY), OR OTHERWISE, FOR DAMAGE TO THE EQUIPMENT, PROPERTY DAMAGE, LOSS OF USE, REVENUE OR PROFIT, COST OF CAPITAL, COST OF SUBSTITUTE EQUIPMENT, ADDITIONAL COSTS INCURRED BY BUYER (BY WAY OF CORRECTION OR OTHERWISE) OR ANY OTHER INCIDENTAL, SPECIAL, INDIRECT, OR CONSEQUENTIAL DAMAGES, WHETHER RESULTING FROM NONDELIVERY OR FROM THE USE, MISUSE OR INABILITY TO USE THE PRODUCT. This exclusion applies even if the above warranty fails of its essential purposes and regardless of whether such damages are sought for breach of warranty, breach of contract, negligence, or strict liability in tort or under any other legal theory. Some states do not allow the exclusion or limitation of incidental or consequential damages, so the above limitation may not apply to you.

This warranty gives you specific legal rights, and you may also have other rights, which vary from state to state.

Complete this portion and keep for your records.

Purchased From: _____
(Dealer or store name)

Phone Number: _____
(Dealer or store telephone number)

Product/Model: : _____
(For example: EFX534i or C966i)

Serial Number: : _____
(The serial number is found on the shipping container.)

Effective 27 March, 2006
P/N 36286-112

Thank You and Welcome to Precor

PRECOR® USA
move beyond®

We are confident that you will be pleased with your purchase and that your new Precor equipment will help satisfy your customers' fitness needs, while helping you meet your business goals.

To allow us to serve you better, please take a few moments to complete and return your warranty registration.

YOU MAY ALSO REGISTER ONLINE AT

www.precor.com/warranty

If you have questions or need additional information, contact your local dealer or call Precor Commercial Products Customer Support at 888-665-4404.

Fold along dotted line and tape closed before mailing.

COMM.

PRECOR® USA
Precor Incorporated
20031 142nd Avenue NE
PO Box 7202
Woodinville, WA 98072-4002

PLACE
STAMP
HERE

TELL US ABOUT YOUR NEW PRECOR PRODUCTS

Date of Purchase:

Month Day Year

Purchased from (Dealer name)**:**

Product Serial Number(s):

The serial number is located on the shipping box and on the product.

Add additional sheets of paper or register online at www.precor.com/warranty

Please indicate the type and number of products purchased:

- ❑ #: _____ Elliptical Fitness CrossTrainer (EFX®)
- ❑ #: _____ Treadmill
- ❑ #: _____ Stair Climber
- ❑ #: _____ Cycle
- ❑ #: _____ Strength Station
- ❑ #: _____ StretchTrainer™

TELL US ABOUT YOUR FACILITY

Name of Facility

❑ Mr.
❑ Mrs.
❑ Ms.

Contact Person — First Name Last Name

Facility Address Apt./Suite

City State Zip Code

Area Code Facility Telephone Number

Your Business Email Address

How many members do you have?

❑ Less than 100 ❑ 100 – 500 ❑ 500 – 1000 ❑ 1000 – 2000 ❑ 2001 +

What percentage of floor space do you allocate for cardio equipment?

❑ 0% to 20% ❑ 20% to 40% ❑ 40% to 60% ❑ 60% to 80% ❑ 80% to 100%

What type of equipment makes up your cardio offering (check all that apply)?

❑ Treadmills ❑ Ellipticals ❑ Cycles ❑ Stair Climbers ❑ Rowing Machines ❑ Other _____

What other brands of cardio equipment do you currently offer (check all that apply):

❑ Life Fitness ❑ True ❑ Cybex ❑ StarTrac ❑ Other _____

What other Precor equipment do you currently offer (check all that apply):

❑ EFX ❑ Cycle ❑ StretchTrainer™
❑ Treadmill ❑ Stair Climber ❑ Strength Machine ❑ Other _____

TELL US ABOUT YOUR PURCHASE

Which best describes this purchase (check all that apply):

- ❑ First Precor product
- ❑ Replaces a Precor product of the same type
- ❑ Replaces same type of product – different brand
- ❑ Enhancement to equipment already owned

How did you FIRST become aware of this product (choose only one):

- ❑ Authorized Precor dealer
- ❑ Precor sales representative
- ❑ Trade show/conference
- ❑ Internet
- ❑ News report or product review
- ❑ Club/fitness magazine advertisement
- ❑ Trade/consumer magazine article
- ❑ Other _____

What factors MOST influenced your decision to purchase this product (choose up to three):

- ❑ Precor reputation
- ❑ Prior product experience
- ❑ Design/appearance
- ❑ Value for the price
- ❑ Special product features
- ❑ Warranty
- ❑ Service
- ❑ Rebate or sale price

Please detach and mail in the warranty registration within ten days of purchase.

P/N 45622-101 Effective 30 June 2002

Precor, C, CrossRamp, EFX, M, Move Beyond, and SmartRate are registered trademarks of Precor Incorporated.
AMT, Adaptive Motion Trainer, Crosstrainer, QuickStart, and StretchTrainer are trademarks of Precor Incorporated.
Copyright 2008 Precor Incorporated.
Specifications subject to change without notice.
www.precor.com

NOTICE:
Precor is widely recognized for its innovative, award winning designs of exercise equipment. Precor aggressively seeks U.S. and foreign patents for both the mechanical construction and the visual aspects of its product design. Any party contemplating the use of Precor's product designs is hereby forewarned that Precor considers the unauthorized appropriation of its proprietary rights to be a very serious matter. Precor will vigorously pursue all unauthorized appropriation of its proprietary rights.

PRECOR® USA
move beyond®

Precor Incorporated
20031 142nd Ave NE
P.O. Box 7202
Woodinville, WA USA 98072-4002
1-800-347-4404

WEEE

100i POM 49735-104, en
Warranty # 36286-112, en
Registration Card# 45622-101, en
03 March 2008

User's Reference Manual

100i

Commercial Adaptive Motion Trainer

PRECOR® USA
move beyond®

Important Safety Instructions

When using Precor equipment, always take basic precautions, including the following:

- Read all instructions before using the equipment. These instructions are written for your safety and to protect the equipment.
- Other sections in this manual provide more details of safety features. Be sure to read these sections and observe all safety notices.
- Take time to discuss proper safety and exercise equipment etiquette with the fitness facility manager.
- Before beginning any fitness program, see your physician for a complete physical examination.

  Il est conseillé de subir un examen médical complet avant d'entreprendre tout programme d'exercise. Si vous avez des étourdissements ou des faiblesses, arrêtez les exercices immédiatement.
- Do not overexert yourself or work to exhaustion. If you feel any pain or abnormal symptoms, stop your workout immediately and consult your physician.
- Do not allow children or people unfamiliar with its operation on or near the equipment. Do not leave children unsupervised around the equipment.
- Wear proper exercise clothing and shoes for your workout and avoid loose clothing. Do not wear shoes with heels or leather soles. Check the soles of your shoes and remove any dirt and embedded stones. Tie long hair back.
- For safety, hold onto a stationary handrail or handlebar while using the equipment.
- Keep your body and head facing forward. Never attempt to turn around on the equipment.
- Do not rock the equipment. Do not stand on the handrail(s), display console, or covers.
- Use care when getting on or off the equipment. Stand on the rear pedestal and then place one foot in the lower foot plate. Grasp an arm or a stationary handlebar for stability while you step into the other foot plate.
- The rear pedestal provides an elevated platform for stepping on and off the equipment. It also indicates the buffer zone that people must stay clear of when someone is using the equipment.
- Never place your hands or feet in the path of the foot plates because injury may occur to you or damage may occur to the equipment.

Obtaining Service

The fitness facility manager can help you with most questions regarding the equipment. For additional information about product operation or exercise routines, refer to the Precor web site at www.precor.com.

Table of Contents

Important Safety Instructions **1**
Obtaining Service 1

AMT Features **3**
Adaptive Motion 3
Moving Handlebars Support the Total Body Workout 3
Using the Stationary Handrails 3
Self-Powered Features 4

Heart Rate Features **5**
Important Use and Safety Information 5
Wearing a Chest Strap 7
Using the Touch-Sensitive Grips 8
Using SmartRate 8
Exercise to Your Target Heart Rate 10
Heart Rate Analysis 10
Troubleshooting Heart Rate 11

Display Console **12**
More Information about the Upper Display 14
Stride Length Display 15
More Information about the Center Display 15
More Information about the Lower Display 16
Keypads 17

Workout Options **21**
Choosing QUICKSTART 22
Selecting a Program 23
Storing Workout Statistics 24
Setting Display Preferences Before Exercising 25
Cooling Down After a Workout 26
Pausing During a Workout or the Cool-Down Period 26
Ending a Workout 27

Programs **28**
Choosing a Program 28
Program Tips 28
Manual Program 29
Interval Program 29
Heart Rate Program 30
Fat Burner Program 31

Exercise Session **32**
Changing Programs in Mid-session 32
Changing the Workout Time 33
Adjusting Program Goals 33
Changing Your Workout Display Options 34
Changing the Units of Measure 36
Selecting a Language 36

AMT Features

The AMT is equipped with certain items that, when used properly, help sustain an enjoyable workout. These items include:

- Adaptive Motion™
- Moving handlebars for a total body workout
- Using the Stationary Handrails
- Self-powered features

Important: *Before exercising, review the safety instructions found at the beginning of this manual.*

Adaptive Motion

The technology behind the Adaptive Motion, low-impact, cardio trainer adapts to your movements and lets you shift from short strides to long strides, walking and running, or move in to deep lunges.

Moving Handlebars Support the Total Body Workout

The handlebars provide an upper-body workout which helps increase cardiovascular fitness. By adding the total body movement to your cross training workout, you are actually increasing your work effort and enhancing your overall fitness level.

Using the Stationary Handrails

To maintain your balance, always grasp a stationary handrail when you step on or off the equipment and when you use the keypads.

To learn more about the touch-sensitive grips, refer to *Heart Rate Features*.

Self-Powered Features

The equipment does not require an electrical power connection. It has an internal battery that is recharged every time you exercise for a reasonable period of time. Meeting the minimum requirements for operation causes the Precor banner to appear. You can press QUICKSTART or select a program to begin exercising. For more information, refer to *Workout Options*.

If you do not meet the minimum requirements for operation, a 30-second shutdown process begins. Dots appear in the display and all key presses are ignored. If no movement is detected, the dots steadily disappear as the countdown continues.

If you wish to resume exercising, you need to do so before the dots disappear from the display.

Heart Rate Features

Heart rate and SmartRate® features are available when you wear the chest strap or grasp both touch-sensitive grips. When a heartbeat is detected, the HEART RATE display shows your heart rate and, if your age has been entered, the SmartRate LED blinks and indicates your target zone.

Important Use and Safety Information

Read the following before using the heart rate or SmartRate features.

- Consult your physician before engaging in any vigorous exercise. Do not use the heart rate programs until authorized by your physician.
- Know your heart rate and your physician-recommended heart rate target zone. Individual heart rates vary according to several physiological factors and may not correspond directly with the following figure.
- Always face forward on the equipment and use the stationary handrail or handlebars for balance.
- On self-powered equipment, maintain a comfortable rate of motion above the minimum requirements. Check with the facility manager to determine the requirements to maintain power.

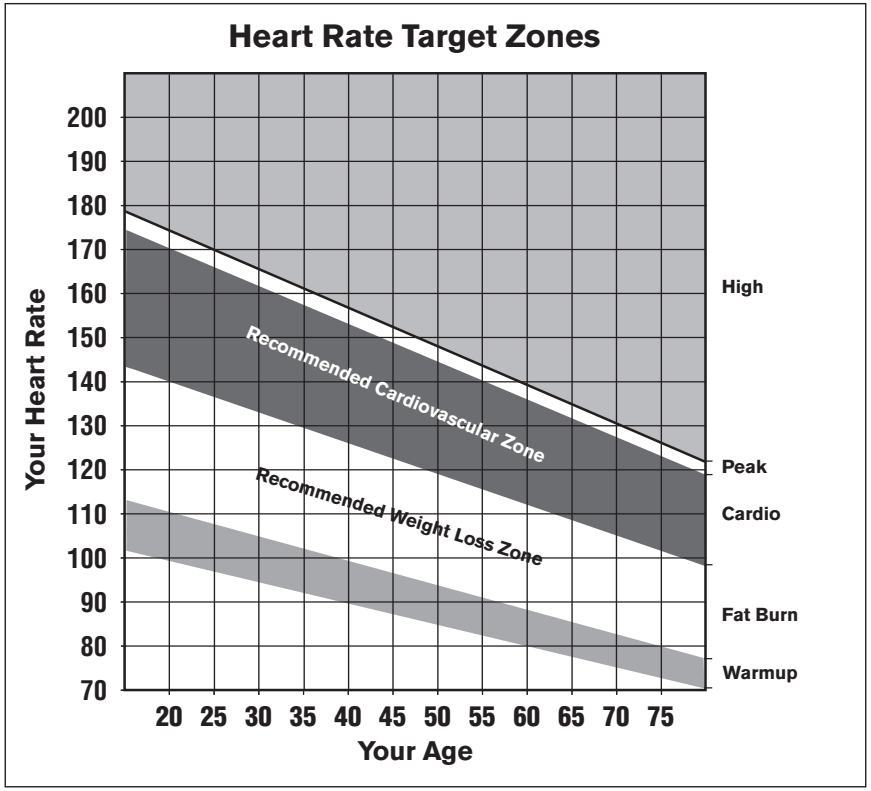

Figure 1: Heart rate target zones

- The calculation used for the heart rate target zone is:

  (220 minus your age) multiplied by a percent.

  For example:
  Warmup range: (220 minus your age) multiplied by 55%
  Peak range: (220 minus your age) multiplied by 85%

- After you put on the chest strap, face the display console for a minimum of 15 seconds. This allows the receiver in the console to recognize the signal from the chest strap.
- If **Hr** blinks in the HEART RATE display, it is detecting a signal, but has not yet determined your heart rate. Make sure the chest strap is positioned properly around your chest and against your skin.
- If you prefer to use the touch-sensitive grips, grasp both and wait five to ten seconds. Make sure both hands are moist (not dry).
- When a signal is detected, a number flashes in the HEART RATE display and indicates your heart rate.

Wearing a Chest Strap

During a workout, the heart rate features appear on the display when you wear a chest strap. To receive an accurate reading, the chest strap needs to be in direct contact with your skin.

1. Carefully dampen the back of the strap with tap water Refer to the following figure.

   Note: Do not use deionized water. It does not have the proper minerals and salts to conduct electrical impulses.

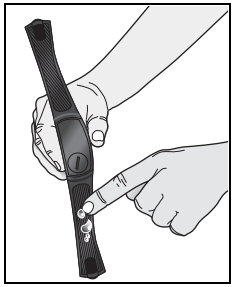

Figure 2: Moisten chest strap

2. Adjust the strap and fasten it around your chest. The strap should feel snug, not restrictive. Refer to the following figure.

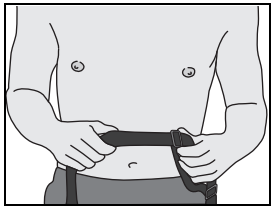

Figure 3: Adjust chest strap

3. Make sure that the chest strap is right side up, lies horizontally across your chest, and is centered in the middle of your chest. Refer to the following figure.

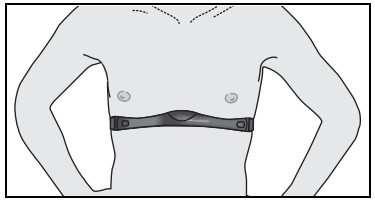

Figure 4: Fasten chest strap

After you put on the chest strap, face the display console for a few seconds. This allows the receiver in the console to recognize the signal from the chest strap.

Using the Touch-Sensitive Grips

While exercising, you must grasp both touch-sensitive grips for a minimum of five to ten seconds to transmit your heart rate to the display. Refer to the following figure.

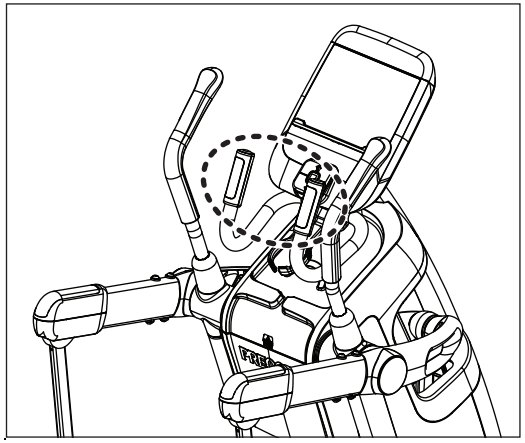

Figure 5: Touch-sensitive grips

Usually, the concentration of salts in a person's perspiration provides enough conductivity to transmit a signal to the receiver inside the display console. However, some people, because of body chemistry or erratic heart beats, cannot use the touch-sensitive grips. A chest strap may provide better results.

Important: *While exercising, do not wear a chest strap and grasp the touch-sensitive grips at the same time. Using both features may cause erratic heart rate readings.*

Using SmartRate

The SmartRate feature helps you monitor and maintain your heart rate in the target zone best suited to your specific needs. When a heart rate signal is detected, a single LED blinks and indicates the zone that your heart rate is in.

Important: *To use the SmartRate feature, you must enter your age during program selection. Refer to* Selecting a Program.

The following table shows the percents used in calculating the heart rate target zones. While your heart rate remains within these zones, the corresponding light blinks and provides a visual cue.

CAUTION: Your heart rate should never exceed 85% of your maximum aerobic heart rate or go above PEAK. If it does, immediately reduce the intensity of your workout to return your heart rate to your physician-recommended target zone.

Table 1. Heart rate target zones and SmartRate LEDs

Heart Rate Zone Percent	***LED Lit***	***LED Blinking***	***Zone Label***
Below 50	First	Orange	WARMUP
50 to 54	Second	Orange	WARMUP
55 to 59	Third	Green	FAT BURN
60 to 64	Fourth	Green	FAT BURN
65 to 69	Fifth	Green	FAT BURN
70 to 74	Sixth	Green	CARDIO
75 to 79	Seventh	Green	CARDIO
80 to 84	Eighth	Green	CARDIO
85 to 87	Ninth	Orange	PEAK
Above 87	Tenth	Orange	HIGH

The SmartRate indicator lights do not blink when:

- You do not wear or improperly position the chest strap. Or, you fail to grasp both touch-sensitive grips for five to ten seconds.
- You do not enter your age during an exercise session.

  For example, pressing QUICKSTART at the Precor banner causes the Manual Program to begin. Your age has not been entered and is considered a null value. Your heart rate will appear in the HEART RATE display when you hold onto the touch-sensitive grips or wear a chest strap, but none of the SmartRate LEDs blink because the appropriate calculations have not been made.

  Note: You can remedy this situation by choosing a program using one of the PROGRAMS keys and entering your time, weight, and age.

Exercise to Your Target Heart Rate

A dedicated window displays your heart rate while you exercise. To view your heart rate (beats per minute) on the display, either wear a chest strap or grasp both touch-sensitive grips.

The Precor web site (www.precor.com) has several suggestions for workouts with varying levels of intensity. It provides many workout details that include the appropriate target heart rate.

The equipment includes one or more heart rate programs that let you exercise based on a specified target heart rate. As you exercise, the programs monitor your heart rate and automatically maintain it within a few beats per minute of your selected target. To use these programs, press the PROGRAMS - HEART RATE key. For more information, refer to *Programs*.

Heart Rate Analysis

Every time you complete a program using the chest strap or touch-sensitive grips, the display provides a heart rate analysis after the workout summary. Refer to *Ending a Workout*.

Your average heart rate appears followed by the maximum heart rate achieved during your workout. A third display appears, if you entered your age, and indicates the amount of time your heart rate remained between the target zones shown.

The heart rate analysis is based on how often your heart rate signal is received while exercising. If you use the chest strap, the average heart rate will be more accurate than if you occasionally grasp the touch-sensitive grips.

Troubleshooting Heart Rate

The following table may help you understand and troubleshoot erratic heart rate readings.

Important: *A heart rate can only be detected when the Precor heart rate receiver is properly installed in the display. A user must wear the chest strap or grasp both touch-sensitive grips.*

Table 2. Erratic heart rate readings

What appears on the display	***Cause***	***What to do***
Nothing	The heart rate receiver is not installed or it has been disconnected.	Call Customer Support. Refer to *Obtaining Service*.
HR or **Hr**	A signal is being detected through the chest strap or the touch-sensitive grips, but a valid heart rate is not yet established.	Be sure that the chest strap is moist, centered, and in direct contact with your skin. If you are using the touch-sensitive grips, continue to grasp both of them. Wait a few moments for your heart rate to appear.

Note: To conduct electrical impulses from a user's heart, both touch-sensitive grips must be grasped firmly for five to ten seconds. Usually, the concentration of salts in a person's perspiration provides enough conductivity to transmit a signal to the receiver in the display console. However, because of body chemistry or erratic heartbeats, some people cannot use the touch-sensitive grips. A chest strap may provide better results.

Display Console

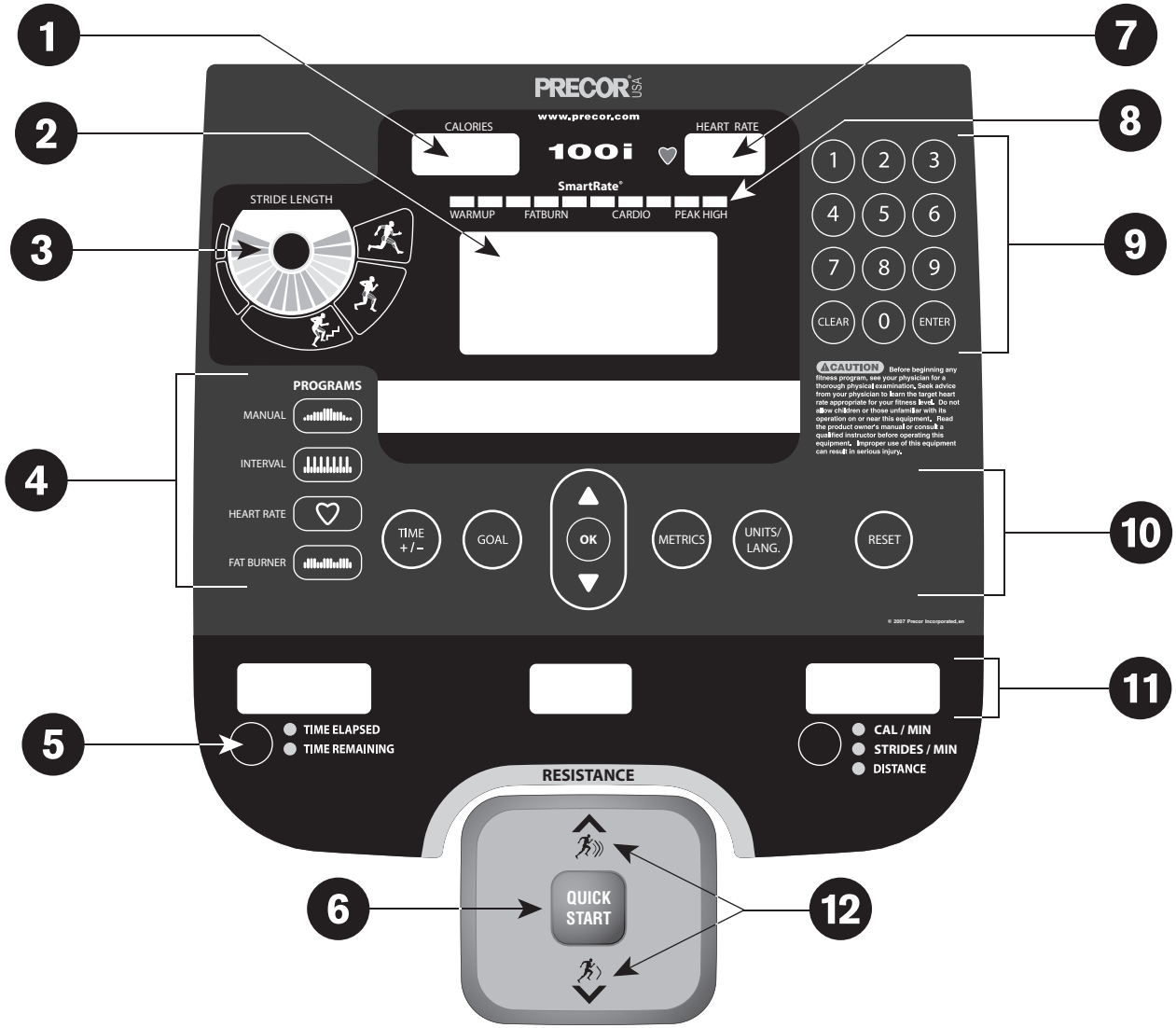

1. **CALORIES display:** The estimated cumulative number of calories being burned appears.

2. **Upper display:** Initially shows the Precor banner. It changes to the program profile when you select a program or press QUICKSTART. A blinking column in the profile indicates your position.

3. **STRIDE LENGTH display:** A lighted pendulum swings according to your stride length. The pendulum swings to the left as you move your left leg and to the right as you stride forward with your right leg. The icons indicate which muscle groups are affected.

4. **Center display and the PROGRAMS keypad:** When you press a PROGRAMS key, the program profile appears in the upper display and the program name appears in the center display. During your session, additional information appears in the center display depending on program and user selections.

5. **Selection keys:** Press the key to move through the information in each column, so you can choose what you want to display during your session. Indicator lights appear next to the item that is displayed.

6. **QUICKSTART:** Press QUICKSTART to begin your workout immediately.

7. **HEART RATE display:** If a heart rate is detected, this area displays your heart rate.

8. **SmartRate display:** A blinking LED lights when you choose a program and enter your age during the setup prompts.

9. **Number keys:** When you begin a program, you can use the number keys to answer the setup prompts, such as your weight and age. During an exercise session, use the number keys to update information. If the entertainment option is attached, the number keys act as TV channel controls.

10. **Navigational keys:** These keys let you display or change exercise information and end your session. For more information, refer to *Navigational Keypad*.

11. **Lower display:** While you exercise, three sets of numbers show information about your session. For more information, refer to *Lower Display Keypad and the Selection Keys*.

12. **RESISTANCE keys:** Use these keys to adjust the resistance.

More Information about the Upper Display

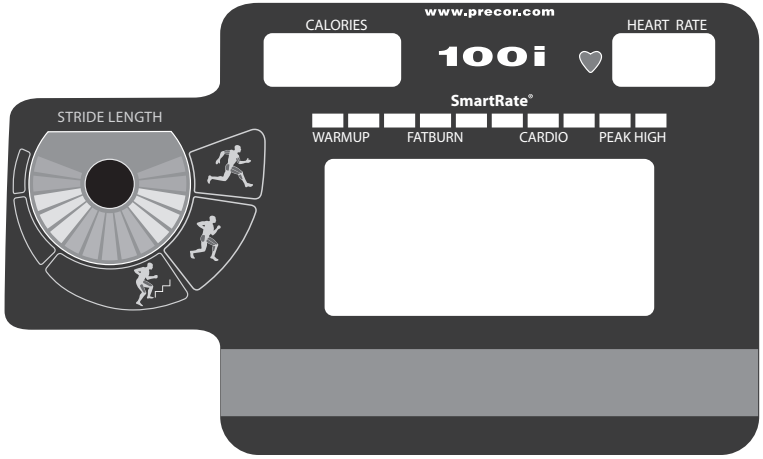

The upper display includes the CALORIES, HEART RATE, SmartRate, and a program profile display. The following descriptions explain what appears in the displays.

CALORIES–indicates the estimated cumulative number of calories being burned.

HEART RATE–displays your heart rate when you wear a chest strap or grasp both touch-sensitive grips. Refer to *Heart Rate Features*.

SmartRate–displays your heart rate as a blinking segment which indicates the zone your heart rate is in when you enter your age and wear a chest strap or grasp both touch-sensitive grips. Use this display as a visual aid to keep your heart rate in your preferred zone. Refer to *Using SmartRate*.

Program profile–appears during your exercise session. A blinking segment in the profile indicates your position. In most programs, the RESISTANCE setting affects the column height as shown in the following figure. The profile raises or lowers according to which RESISTANCE key is pressed.

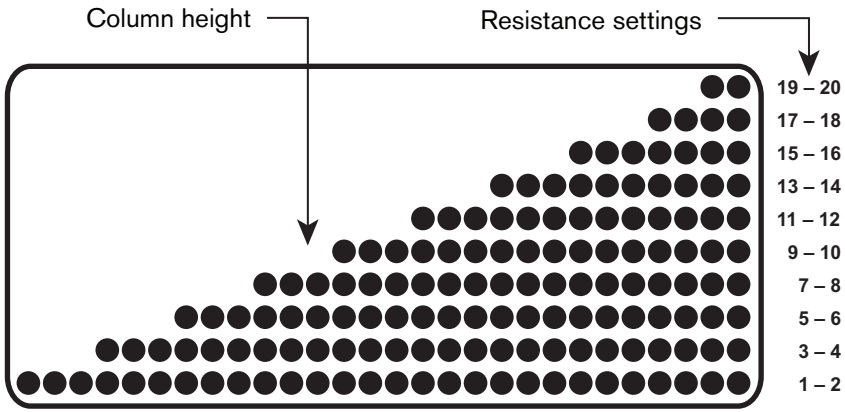

Figure 6: Column height in the program profile

Stride Length Display

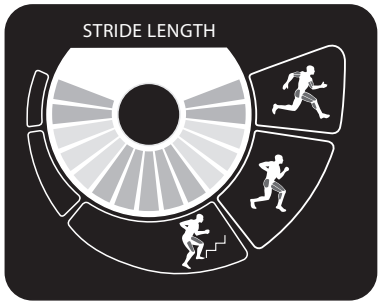

The STRIDE LENGTH display presents a visual representation of the length of your stride. The lighted pendulum swings to the right as you stride forward with your right leg and swings to the left as your left leg moves forward.

The icons indicate which muscle groups are affected by the length of your stride. To view the actual measurement (inches or centimeters) of the length of your stride, choose STRIDE LENGTH through the METRICS key. Refer to *Changing Your Workout Display Options*.

As you lengthen your stride, the lighted pendulum should consistently reach the same level on the right as on the left. This indicates that you are expending the same amount of energy and affecting the same muscle groups with your right leg as with your left.

More Information about the Center Display

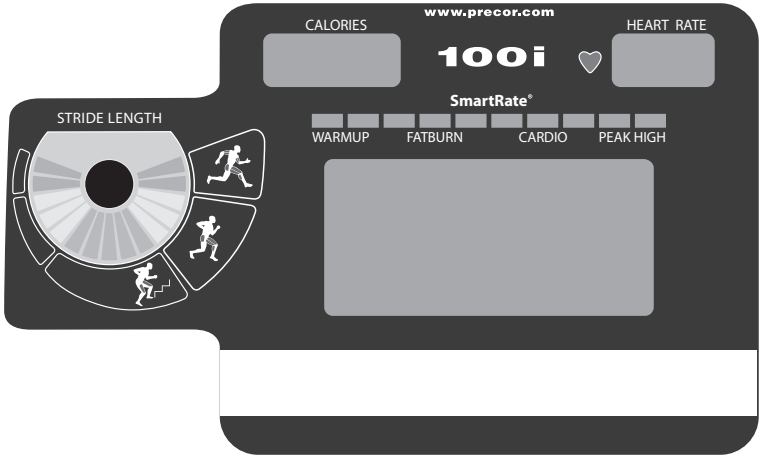

The center display presents the program name when you select a program. During an exercise session, the center display becomes a message bar showing additional information depending on user selections and program interludes. For more information about the selections that can appear in this display, refer to *Exercise Session*.

More Information about the Lower Display

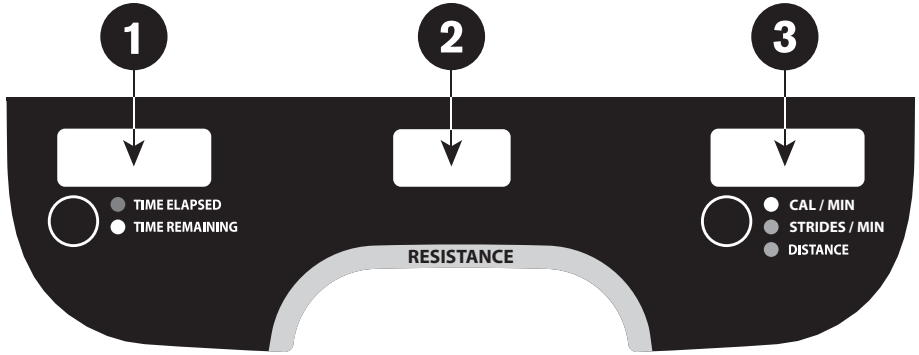

The lower display provides information about your workout session. Pressing the keys beneath each window affects what appears in the displays. Each display provides information about your workout statistics and is described in the list below.

Note: If you choose to rest a book or magazine on the display, you can still view these workout statistics.

1 TIME ELAPSED and TIME REMAINING

TIME ELAPSED–displays time in minutes and seconds and indicates the amount of time you have been exercising. When you exceed 60 minutes during a single session, the display converts to hours and minutes.

Note: The fitness facility can place limits on workout time.

TIME REMAINING–shows the amount of time remaining in a workout. If the selected time is less than 60 minutes, the display shows time in minutes and seconds. If you select a time greater than 60 minutes, the display reflects hours and minutes until the countdown reaches 60 minutes, at which time the display reverts to minutes and seconds.

2 RESISTANCE

RESISTANCE–displays the resistance you feel against your stride. The RESISTANCE keys let you set a resistance level between 1 and 20.

3 CALORIES/MIN, STRIDES/MIN, and DISTANCE

CAL/MIN–displays the approximate number of calories burned per minute.

STRIDES/MIN–displays the number of strides you complete in a minute up to a maximum value of 510 strides per minute. A stride is an exaggerated walking movement. If you start in a position with one foot plate forward, a stride is completed when you move the rear foot plate all the way forward while the other foot plate moves to the rear. Two strides create one complete revolution of the flywheel. So, the value that appears on the display is always an even number between 56 and 510.

DISTANCE–shows linear distance in either miles or kilometers.

Keypads

Use the keypads to enter your exercise session selections and display preferences.

Distinct keypads exist on the display and are discussed in this section:

- Lower Display keypad and the selection keys
- Navigational keypad in the center of the display
- PROGRAMS keypad
- Number keypad with the ENTER and CLEAR keys

Lower Display Keypad and the Selection Keys

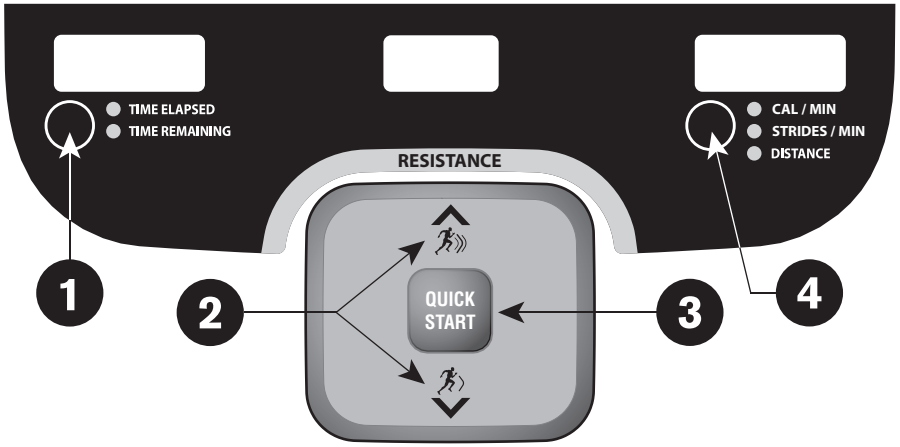

1. **Left selection key:** Every time you press this key, the display reflects either the amount of time elapsed since you began your exercise session or it shows the time remaining. An LED lights and indicates which information is being displayed.

2. **RESISTANCE:** Press and hold a RESISTANCE key to increase or decrease the force applied against your stride from 1 to 20.

3. **QUICKSTART:** Press QUICKSTART to start your exercise session immediately using the Manual Program. Refer to *Choosing QUICKSTART*.

4. **Right selection key:** Every time you press this key, the display reflects the calories per minute, the strides per minute, or the distance travelled since you began your exercise session. An LED lights and indicates which information is being displayed.

Navigational Keypad

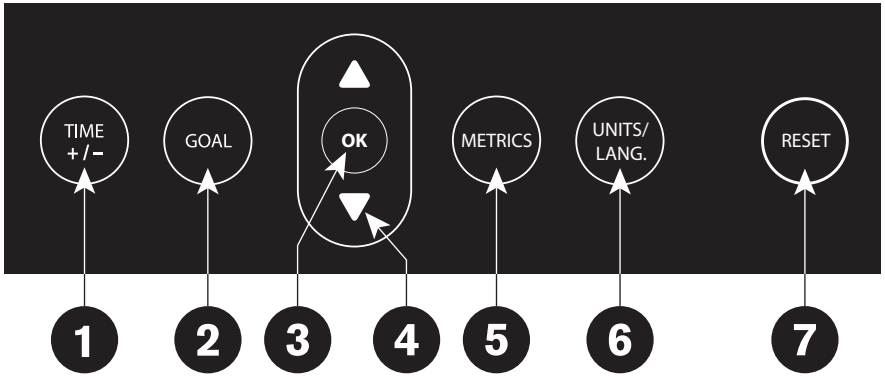

The navigational keypad provides several ways to change your exercise session and to display various workout statistics. The OK key, which allows you to confirm display selections, is also part of the navigational keypad.

1. **TIME +/-:** You can change the workout time, while you are exercising, by pressing the TIME +/- key. A blinking number appears in the display. You can change the number using the navigational arrow keys or enter a different time using the number keys. Refer to *Changing Your Workout Display Options*.

2. **GOAL:** Press the GOAL key to change the goal setting from time, distance, or calories when using the Manual, Interval, or Heart Rate Programs. Refer to *Adjusting Program Goals*.

   Note: You cannot change the goal during the warm up phase of the Heart Rate Program.

3. **OK:** Use the OK key to confirm responses to specific prompts.

4 **Up and Down Arrows:** These keys present the available selections and affect what appears on the display. Throughout this manual they are referred to as the navigational arrow keys.

5 **METRICS:** The METRICS key provides menu selections that let you customize the display with specific workout statistics after you are already engaged in exercising. Refer to *Changing Your Workout Display Options*.

6 **UNITS/LANG.:** You can change the units of measure or select one of several different languages by pressing this key. The display reflects your selections after you press the OK key. For more information, refer to *Changing the Units of Measure* or *Selecting a Language*.

7 **RESET:** Press this key to end the workout session and view your workout summary. An exception to this rule exists if you have entered the 30-second shutdown period. When you press RESET, the display returns to the Precor banner. Refer to *Pausing During a Workout or the Cool-Down Period* or *Self-Powered Features*.

PROGRAMS Keypad

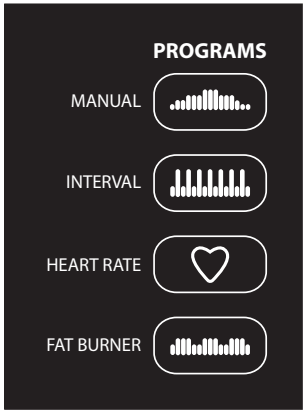

The PROGRAMS keypad provides access to all the exercise programs. Press the center of the key to view the top level program in its menu. Pressing the key again displays the next program in the menu, if one is available, as shown in the following table. For a description of each program, refer to *Programs*.

Note: Use the OK key to confirm your selection. For more information, refer to *Workout Options*.

Table 3. Available programs

PROGRAMS key	***Program Menu***
MANUAL	MANUAL
INTERVAL	INTERVAL
HEART RATE*	BASIC HRC*
FAT BURNER	FAT BURNER

* Use of a chest strap or the touch-sensitive grips is required.

Number Keypad

The number keypad has several functions depending on what is connected to the equipment.

Connection	***Description***
Computer (CSAFE compatible)	If a computer is attached to the CSAFE connection on the equipment, the number keypad lets you enter your user ID and answer other setup prompts.
Entertainment Option	If an entertainment option is connected to the display, the number keypad acts as a remote control which you use to select the available channels. You can also enter number values in answer to exercise session prompts.
Nothing	Whether or not peripheral devices are attached to the equipment, the keypad lets you enter number values in answer to exercise session prompts. You need to press ENTER or OK to confirm the selection.

The CLEAR and ENTER keys provide the following functions:

CLEAR: Use the CLEAR key to remove the last number being displayed.

ENTER: Use the ENTER key to accept the number being displayed.

Note: The OK and ENTER keys are usually interchangeable and provide the same function when no peripheral devices are attached to the equipment. However, when answering prompts that originate from a CSAFE device or computer connection, use the ENTER key.

Workout Options

CAUTION: Before beginning any fitness program, see your physician for a complete physical examination. Know your physician-recommended heart rate target zone.

1. Stand on the rear pedestal and face the display.
2. Place one foot in the lower foot plate and grasp an arm or a stationary handlebar for stability while you step into the other foot plate.
3. When you are comfortably situated, begin climbing.

   CAUTION: Hold on to a handrail to balance yourself.

4. Select one of the following options:

Option...	***Steps...***
To start exercising immediately	• Use the QUICKSTART key. • Refer to *Choosing QUICKSTART*.
To select a program	• Press a PROGRAMS key. • Refer to *Selecting a Program*.
To enter a user ID	• Use the ENTER key. • Refer to *Storing Workout Statistics*.
To set display preferences in units of measure or language	• Use the UNITS/LANG. key. • Refer to *Setting Display Preferences Before Exercising*.

Note: The QUICKSTART key is disabled when you press a PROGRAMS key. You need to confirm each exercise session selection (program, time, weight, and age) using the OK key.

Choosing QUICKSTART

1. While the Precor banner scrolls, press QUICKSTART to begin the Manual Program.

   QUICKSTART applies the following defaults:

Prompts	***Default Value***
Program	Manual
Time	Fitness Facility setting
Weight	150 lb (68 kg)
Age	0

2. Use the RESISTANCE keys to change the resistance.

3. Maintain a comfortable and consistent stride rate while exercising.

   Note: To use the SmartRate feature, you need to specify your age and wear a chest strap or grasp both touch-sensitive grips. In this case, press MANUAL and then press OK. Follow the prompts to enter your weight and age. You can use the navigational arrow keys or the number keypad to change the blinking prompts. Press OK to confirm the entries.

Selecting a Program

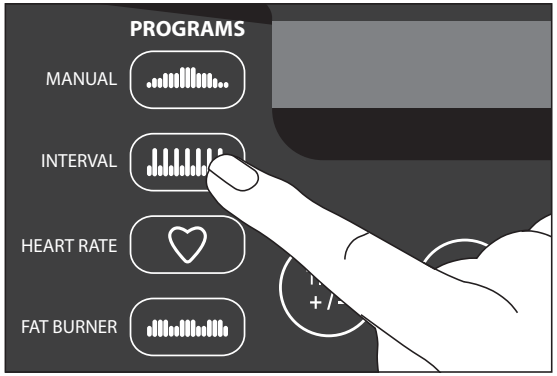

1. While the Precor banner scrolls, press one of the PROGRAMS keys, and then press OK.
2. A time prompt blinks in the display. Use the navigational arrow keys or the number keys to adjust the minutes (1–240), and then press OK. (Or, press CLEAR to return to the default time limit).

   Note: The fitness facility can set limits for workout, pause, and cool-down times. So, selecting an unlimited workout time may not be allowed. Check with your fitness facility manager.

   To access the NO LIMIT option at the time prompt, use the number keypad and type in 240, then press the up arrow key. When NO LIMIT appears, press OK.

   If you choose this option, the automatic cool-down period is eliminated. You will need to incorporate a cool-down period by accessing the Manual Program.
3. Enter your weight (1–999), and then your age (1–99) when prompted.

   Note: To change a value (program, time, weight, or age) that you have already entered, press RESET to return to the Precor banner. Select a program and re-enter the appropriate values.
4. Maintain a comfortable and consistent stride rate while exercising.

Storing Workout Statistics

Many fitness facilities connect Precor equipment to a computer so you can easily retrieve your workout statistics and determine how well you are meeting your fitness goals. If you are interested in maintaining workout statistic information, ask the manager to create a user account and a user ID for you. A user ID entry is required to store your statistics.

Note: If the display is blank, you will need to maintain the minimum rate of motion to supply power. If the Precor banner appears, the equipment is not connected to a computer. Refer to *Selecting a Program* or *Choosing QUICKSTART*.

If the equipment is connected to a computer, the following appears:

CHOOSE QUICKSTART, ENTER, OR A PROGRAM TO BEGIN

To save the statistics generated during your exercise session, take the following steps:

1. Press ENTER.
2. Use the number keypad to specify your 5-digit user ID. If you make a mistake, press the CLEAR key and reenter the correct number.
3. When your user ID is shown, press ENTER.

   A message appears and indicates when the user ID is accepted by the computer.
4. To begin your exercise session, select a program. Refer to *Selecting a Program*.

   Note: To bypass the user ID entry, press ENTER while all five zeros appear in the user ID field. The statistics generated during your exercise session will not be added to your file.

Setting Display Preferences Before Exercising

While the Precor banner scrolls, you have the opportunity to set units of measure and language display preferences.

Once you set your display preferences, you have a 5-second window to select a program. If you do not select a program from the PROGRAMS menu or press QUICKSTART within the 5-second window, the preferences return to the fitness facility settings.

1. As the Precor banner scrolls, press UNITS/LANG. Continue pressing the key to view the two menu options: UNITS and LANGUAGE.
2. When you are ready, press OK to select the displayed menu option.
3. Use the navigational arrow keys to display each menu option or preference. Press OK to select it.
4. Follow the prompts on the display and return to the Precor banner.

Menu Option	***Preferences***	***Effect***
UNITS	U.S. or METRIC	Determines which units of measure appear on the display.
LANGUAGE	ENGLISH, DEUTSCH, ESPANOL, FRANCAIS, NEDERLANDS, PORTUGUES, RUCCKIJJ, and ITALIANO.	Causes the display messages and prompts to appear in the chosen language.

Note: The selections that you make prior to a workout reset to the fitness facility's default settings once your program or the pause time limit ends.

Cooling Down After a Workout

Incorporate a cool-down period into your workout to help lower your heart rate and minimize muscle stiffness or soreness.

When you complete a program with a time limit or specified goal, you automatically enter a cool-down period. The settings change to help reduce the intensity of your workout.

Note: You cannot switch to a different program, goal, or workout time during the cool-down period. Any pressure on the PROGRAMS keys is ignored.

A workout summary appears at the end of the cool-down period. Refer to *Ending a Workout*.

A cool-down period will not be appended to your exercise session if the following occurs:

- The fitness facility allows an unlimited time goal. A user must enter a time goal of NO LIMIT to access this option. Refer to *Selecting a Program*.
- The fitness facility sets a cool-down time of zero, which eliminates the cool-down phase.
- You exit a program before completing it.

If you specify an unlimited time or the fitness facility removed the cool-down phase, remember to incorporate a cool-down period at the end of your exercise session.

Pausing During a Workout or the Cool-Down Period

If your rate of motion drops below minimum requirements while exercising or during the cool-down period, a 30-second shutdown is initiated. You cannot pause for a longer period of time or change to a different program unless the fitness facility has the optional power adapter attached to the equipment.

When the optional power adapter is attached, you can pause for a set time, usually two minutes. If you do not resume exercising during that time, the display returns to the banner.

1. To pause, slow to a stop.
2. To exit pause mode, resume exercising.

Note: In pause mode, you have the ability to change your program selection or display options if the optional power adapter is attached. Refer to *Changing Programs in Mid-session* and *Changing Your Workout Display Options*.

Ending a Workout

CAUTION: Hold on to a stationary handrail when you near the end of your exercise session.

1. To view your workout summary, maintain the minimum rate of motion when you complete the cool-down period. Refer to *Self-Powered Features*.

   The workout summary appears and shows your cumulative statistics including warm-up and cool-down periods. You can review your statistics as long as you maintain power with the minimum rate of motion.

2. End your session by pressing the RESET key to return to the Precor banner.
3. Slow your movement to a stop.
4. Hold on to a stationary handrail as you step off the equipment.

Note: If the optional power adapter is attached, you do not have to continue the minimum rate of motion to view your workout statistics. When you complete the cool-down period, the workout summary appears. When you are ready, press RESET to return to the Precor banner.

If you hold on to the touch-sensitive grips or wear a chest strap while exercising, a heart rate analysis appears during the workout summary. Refer to *Heart Rate Analysis*.

Programs

This section describes the programs available on the equipment. Use this section as a reference tool to better understand each program's purpose.

Choosing a Program

Choosing a program depends on your goals. If you are a beginner or returning to regular exercise, you can start a cardio-conditioning program to slowly return your body to a comfortable level of exercise. If you have been exercising and feel that you have an intermediate or advanced fitness level, you probably have established goals. The Precor web site (www.precor.com) can give you many ideas about fitness routines and advice from the experts.

Several of the exercise choices on the equipment are preprogrammed with recommended settings. However, you have the option to override the suggested settings, with some exceptions. If changes are not allowed, a message scrolls across the display explaining your options.

If your level of exertion becomes too great, reduce your level of intensity by overriding each upcoming segment in the program profile. When you complete a program that contains a time limit or goal period, an automatic cool-down period begins.

Program Tips

- Begin at the Precor banner and choose a program by pressing a PROGRAMS key or QUICKSTART. Refer to *Workout Options*.
- While exercising, you need to sustain your exercise motion. Stopping any movement causes the equipment to shut down to conserve battery power.
- A blinking column indicates your position as you progress through a program.
- Prior to choosing a program, you may press the UNITS/LANG. key to access units of measure or language settings. After pressing OK to confirm new settings, you must select a program within five seconds for the changes to become effective. Refer to *Setting Display Preferences Before Exercising*.
- To use the SmartRate feature, you need to specify your age and wear a chest strap or hold on to the touch-sensitive grips. For more information, refer to *Changing Your Workout Display Options*.
- In some programs, an unlimited time setting may be an available option. Refer to *Selecting a Program*.
- The fitness facility can set limits on workout, pause, and cool-down times and customize other aspects of your exercise session. Check with your manager to learn if any limits are in place that might affect your program selections.

Manual Program

The Manual Program profile, available by pressing the MANUAL key, begins as a flat line. You control resistance settings using the RESISTANCE keys. The program profile reflects any changes. The blinking column indicates your position in the program.

A cool-down period occurs automatically when you end your workout. An exception to the cool-down period exists if the fitness facility allows it. Refer to *Cooling Down After a Workout* for more information.

Note: To change the workout time, press the TIME +/- key. Refer to *Changing the Workout Time*. To change to a distance or calorie goal, press the GOAL key. Refer to *Changing Your Workout Display Options*.

Interval Program

The Interval Program, available by pressing the INTERVAL key, is among the best for conditioning your cardiovascular system. The program raises and lowers your level of exertion repeatedly for the specified period of time.

The program lets you choose the rest and work intervals according to your training regimen.

While exercising, you can vary your stride rate and the resistance. To change the preset resistance settings, use the RESISTANCE keys. The settings are repeated throughout the remainder of the program. The display lets you know when the resistance is about to change and it indicates the levels of the next interval.

The initial settings for resistance are:

Rest interval resistance:	1
Work interval resistance:	4

If you prefer to set a calorie or distance goal, use the GOAL key. Refer to *Changing Your Workout Display Options*.

Heart Rate Program

The Basic HRC Program, available by pressing the HEART RATE key, lets you set a target for your heart rate. The program adjusts the resistance to maintain your heart rate within two beats per minute of the target heart rate while you exercise. To use this program, you must enter your age and wear a chest strap so your heart rate can be monitored throughout the session.

Important: *Consult your physician to determine the appropriate target heart rate for your age and fitness level. If your physician recommends a different target heart rate than the one that appears on the display, use the navigational arrow keys to change the target heart rate once you finish the warm-up period. Do not exercise over the recommended range.*

Heart Rate Program Tips

The Basic HRC Program enhances your overall cardiovascular fitness levels to help you achieve your weight loss and fitness goals. Read through the following tips before selecting the Basic HRC Program. These tips provide general information regarding how the program functions. For more information and exercise suggestions, refer to the Precor web site at www.precor.com.

Important: *Maintain a rate of motion above the minimum requirements. Refer to* Self-Powered Features*. Automatic adjustments to the resistance cannot take place if you drop below the minimum requirements for operation.*

- The program provides a 3-minute warm-up period. During this time, you may change the resistance, but you cannot change the goal setting.

  Note: When your target heart rate is achieved or the 3-minute period elapses, the warm-up period ends and the program begins at which point, you may change to a distance or calorie goal.

- The program automatically adjusts the resistance to keep your heart rate at the selected target. After the warm-up period, pressing the RESISTANCE keys no longer affects the resistance levels. Check the SmartRate display to see if you are maintaining your preferred zone. Check the HEART RATE display to determine your actual heart rate. For information about understanding your target heart rate, refer to *Heart Rate Features*.

- You can change the target heart rate, but doing so affects how well your target heart rate remains in the preferred zone. It takes time to readjust the resistance so that your heart rate remains on target.

- The workout time is set to the fitness facility limit. To adjust the time, press the TIME +/- key and use the navigational arrow keys followed by OK to change the workout time.
- If you wish to quit the Basic HRC Program, you can make a mid-session transfer to another program, but you cannot return or transfer mid-session to the Basic HRC Program.
- A cool-down period is automatically added to the end of the program.

If you are having difficulty with the heart rate features, talk to your fitness facility manager.

Fat Burner Program

The Fat Burner Program, available by pressing the FAT BURNER key, is a fairly intense 28-minute program designed to burn fat and increase your cardiovascular conditioning. Review the program profile on the display to determine the ascent and descent levels of the program.

Anytime during a workout, you can override the settings by pressing the RESISTANCE keys. The changes raise or lower the columns on the remaining portion of the program profile.

Exercise Session

This section describes how to access the following attributes through the use of the navigational keypad. Any display selections set during the course of your exercise session are reset to the fitness facility settings when you end your session and return to the Precor banner.

While exercising, you can:

- change the program you are using
- change the workout time
- choose between time-, distance-, or calorie-based goals
- display more workout statistics
- choose between U.S. standard and Metric units of measure
- display messages and prompts in a different language

Note: Prior to selecting a program, you can select preferences for language and units of measure. Refer to *Setting Display Preferences Before Exercising*.

When you enter a navigational key menu such as UNITS/LANG. or TIME +/-, you have 30 seconds to make your selection. If no selection is made during those 30 seconds, the display automatically returns to the program session.

Important: *Do not press the RESET key, during those 30 seconds, in an attempt to return to your program because you will inadvertently exit your program. A workout summary appears when you exit the program.*

Changing Programs in Mid-session

You can change programs in the middle of a session by selecting a new program from the PROGRAMS key menu. All accumulated workout statistics are transferred to the new program as you continue exercising.

Certain programs are not available for mid-session transfers due to set goals and program preferences. If this occurs, a message scrolls across the display.

Note: You cannot select a different program if your rate of motion drops below the minimum requirements and the equipment begins its 30-second shutdown. Refer to *Pausing During a Workout or the Cool-Down Period*.

Changing the Workout Time

To change the duration of your program, take the following steps:

1. Press TIME +/-.
2. A workout time blinks in the display. Use the navigational arrow keys or the number keys to adjust the time.
3. Press OK.

   A message scrolls across the display indicating that the new workout time has been accepted.

The fitness facility can limit the duration of exercise sessions and certain programs have fixed time goals which do not allow adjustments. If your attempt to change the workout time is not accepted, display messages scroll and indicate the reasons.

Adjusting Program Goals

To designate a distance, calories, or time goal while exercising take the following steps:

1. Press GOAL. Continue pressing the key to scroll through the available options: TIME, DISTANCE or CALORIES.
2. When you are ready, press OK to select the displayed goal.

Selection	***Description***
TIME	A time-based goal is the setting for all programs. If you want to exercise for a set time, select this goal.
DISTANCE	A distance-based goal lets you select a set distance between 1 and 50 miles or kilometers (km).
CALORIES	A calories-based goal lets you exercise until you reach a set calorie amount between 1 and 1000.

3. A blinking number appears indicating that the system is ready for adjustments to the goal. Use the number keys or navigational arrow keys to change the setting.
4. When you are ready, press OK. If the program you are using allows changes to goal settings, a prompt scrolls across the display indicating that your selection has been accepted. The TIME REMAINING display changes according to the goal being set.

Changing Your Workout Display Options

During an exercise session, the display becomes a message bar. It can show additional workout statistics depending on user selections accessed through the METRICS menu.

To display more workout statistics or choose one among them, take the following steps:

1. Press METRICS.
2. Scroll through all the available workout statistic displays by continually pressing the METRICS key. The following table describes which displays are available.
3. When you are ready, press OK to select a displayed metric or display the entire menu consecutively, by selecting SHOW ALL.

   Note: To remove a scrolling statistic from the message bar, you need to reenter the METRICS menu and select a different workout statistic display or select the OFF option.

Table 4. Workout statistics using OPTIONS or METRICS key

Equipment	*Menu*	*Description*
All	% COMPLETE	Shows how much of the program goal you have completed.
All	TIME IN ZONE	Displays the total time that your heart rate is within the range of 55% to 84% of your target heart rate.
All	SEGMENT TIME REMAINING	Indicates the amount of time, in minutes and seconds, that remain in the highlighted column of the profile before the next column begins blinking.
AMT, climber	AVERAGE SPEED	Displays the average strides per minute.
Treadmills	AVERAGE SPEED	Displays the average miles or kilometers per hour. The number that appears is determined by dividing the total distance traveled by the elapsed time.
All	CALS/MIN	Displays the approximate number of calories burned per minute.
All	CALS/HR	Displays the approximate number of calories burned per hour.
All	WATTS	Shows your current energy expenditure level.
All	METS	Shows the metabolic units associated with your current energy expenditure level, derived from the calories per minute value and adjusted for your weight.
All	TARGET HR	Shows the current target heart rate setting.
All	AVG HEART RATE	Displays your average heart rate. The number is based on systematic sampling taken while you are exercising. A chest strap will give you a more accurate heart rate average than if you occasionally use the touch-sensitive grips. If no heart rate reading occurred during your exercise session, an analysis will not appear in the workout summary.
AMT	STRIDE LENGTH	Shows the current length of your stride in inches or centimeters.
Climber, treadmills	ELEVATION GAIN	Presents the cumulative steps (climber) or incline (treadmills) converted into elevation gained over the course of the program.
Treadmills	PACE	Displays your target speed in minutes and seconds per mile (or kilometer). For example, the number 4:23 indicates that your pace (speed at which you are moving) is 4 minutes and 23 seconds per mile.
All	SHOW ALL	Presents all the workout statistics in this menu in consecutive order.
All	OFF	Stops scrolling the workout statistics, found in this table, across the message bar.

Changing the Units of Measure

Display measurements can appear in either Metric or U.S. Standard. To change this setting, perform the following steps:

1. Press UNITS/LANG. The word UNITS appears on the display.
2. Press OK. UNITS scrolls across the display and is replaced by one of two options: U.S. or METRIC.
3. Toggle between the two options by pressing the down arrow key on the navigational keypad.
4. When you are ready, press OK to select the displayed unit of measure. A message scrolls across the display indicating that the unit of measure has changed.

Selecting a Language

You can choose to display text messages in several different languages. To select a different language before or during an exercise session, take the following steps:

1. Press UNITS/LANG. Press the key a second time and LANGUAGE appears and scrolls across the display.

   Note: When you press the UNITS/LANG. key a third time, you exit the menu and return to the Precor banner. The center display appears blank. To reenter the menu, press UNITS/LANG. again.
2. While LANGUAGE scrolls across the display, press OK to select it.
3. Scroll through the available language options by continually pressing the down key on the navigational keypad.
4. When you are ready, press OK to select the displayed language. A message scrolls across the display indicating that the language has been changed.

100i Commercial Adaptive Motion Trainer

Product Specifications

Length	74 in (199 cm)
Width	28 in (72 cm)
Height	69 in (176 cm)
Weight	445 lb (202 kg)
Shipping weight	520 lb (236 kg)
Power	Self-powered
Frame	Powder-coated steel
Regulatory Approvals	FCC, ETL, CE, EN957

Product Features

CSAFE Compatible
Entertainment Option Available
Heart Rate Telemetry
QuickStart™
SmartRate®
Touch Heart Rate

Programs

Manual
Interval
Heart Rate
Basic HRC*
Fat Burner

Electronic Readouts

% Complete	Resistance
Average Heart Rate*	Segment Time Remaining
Average Speed	SmartRate*
Calories	Stride Length
Calories Per Minute	Strides Per Minute
Calories Per Hour	Target Heart Rate
Distance	Time
Heart Rate*	Time Elapsed
Heart Rate Analysis*	Time in Zone*
Language	Time Remaining
Maximum Heart Rate*	Units
METS	Watts
Profile	Workout Summary

✳ Use of a chest strap or the touch-sensitive handlebar grips is required.

Precor, C, CrossRamp, EFX, M, Move Beyond, and SmartRate are registered trademarks of Precor Incorporated.
AMT, Adaptive Motion Trainer, Crosstrainer, QuickStart, and StretchTrainer are trademarks of Precor Incorporated.
Copyright 2008 Precor Incorporated.
Specifications subject to change without notice.
www.precor.com

PRECOR® USA
move beyond®

Precor Incorporated
20031 142nd Ave NE
P.O. Box 7202
Woodinville, WA USA 98072-4002

NOTICE:
Precor is widely recognized for its innovative, award winning designs of exercise equipment. Precor aggressively seeks U.S. and foreign patents for both the mechanical construction and the visual aspects of its product design. Any party contemplating the use of Precor's product designs is hereby forewarned that Precor considers the unauthorized appropriation of its proprietary rights to be a very serious matter. Precor will vigorously pursue all unauthorized appropriation of its proprietary rights.

WEEE

100i URM 49737-104, en
03 March 2008

Assembly Guide

PRECOR® USA
move beyond®

100i

Commercial Adaptive Motion Trainer

Thank you for choosing Precor. For proper installation, please read this guide thoroughly and follow the assembly instructions. If you do not assemble the AMT according to these guidelines, you could void the Precor Limited Warranty.

Obtaining Service

You should not attempt to service the AMT except for maintenance tasks as described in the *Product Owner's Manual*. If any items are missing, contact your dealer. Should you need more information regarding customer support numbers or a list of Precor authorized service centers, visit the Precor web site at www.precor.com/corp/contact.

Unpacking the Equipment

Ask for help from two or more people to unpack and assemble the AMT.

Required Tools

- Wire tie cutter
- Phillips-head screwdriver
- SAE Standard socket set
- Rubber mallet

Cardio Theater PVS Assembly Instructions

If the Cardio Theater Personal Viewing System (PVS) accompanies this Precor unit, review the PVS assembly instructions found in the Cardio Theater box. Alleviate additional assembly or disassembly steps by combining the two assemblies as needed.

Installation Requirements

Follow these installation requirements when assembling the unit:

- **Assemble the unit near the location where you plan to use it.**
- **Provide ample space around the unit.**
  Open space around the unit allows for easier access.
- **Set up the AMT on a solid, flat surface.**
  A smooth, flat surface under the unit helps keep it level. A level unit has fewer malfunctions.
- **Open the box and assemble the components in the sequence presented in this guide.**
- **Insert all fasteners with your fingers.**
  Use your fingers to properly align and thread the fasteners. This helps alleviate cross-threading. Do not fully wrench tighten fasteners until instructed to do so.

  Important: *When wrench tightening, the head of the fastener should be flush with the product. If it is not, cross-threading has occurred. Do not attempt to rework the assembly as more damage to the equipment will occur. Contact Customer Support. Refer to* Obtaining Service.
- **If you plan to move the unit, obtain help.** Do not grasp any plastic parts while lifting or moving the unit. The plastic parts are not capable of supporting the weight of the unit and they may break.

Hardware Kit

Fasteners		Qty.
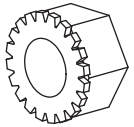	(A) Locknut (5⁄16-inch)	8
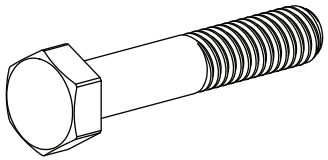	(B) Hex head screw (1¾-inch)	4
	(C) Flat washer (5⁄16-inch)	8

2 – Plastic boot (D)

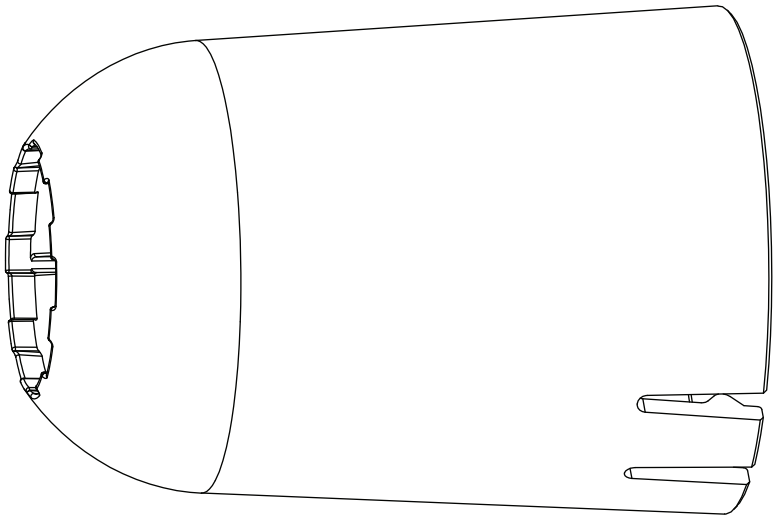

2 – End caps (E)

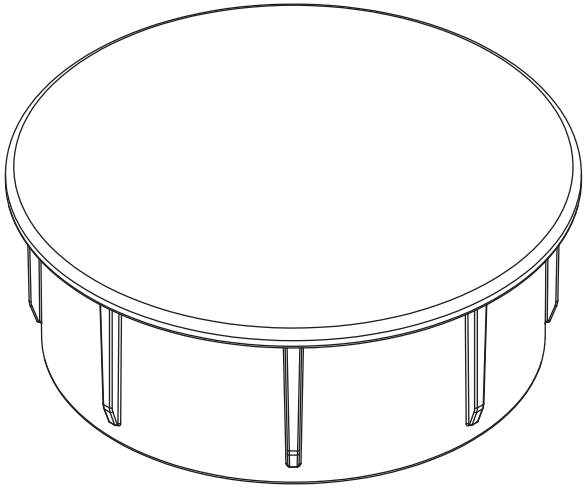

Assembly Steps

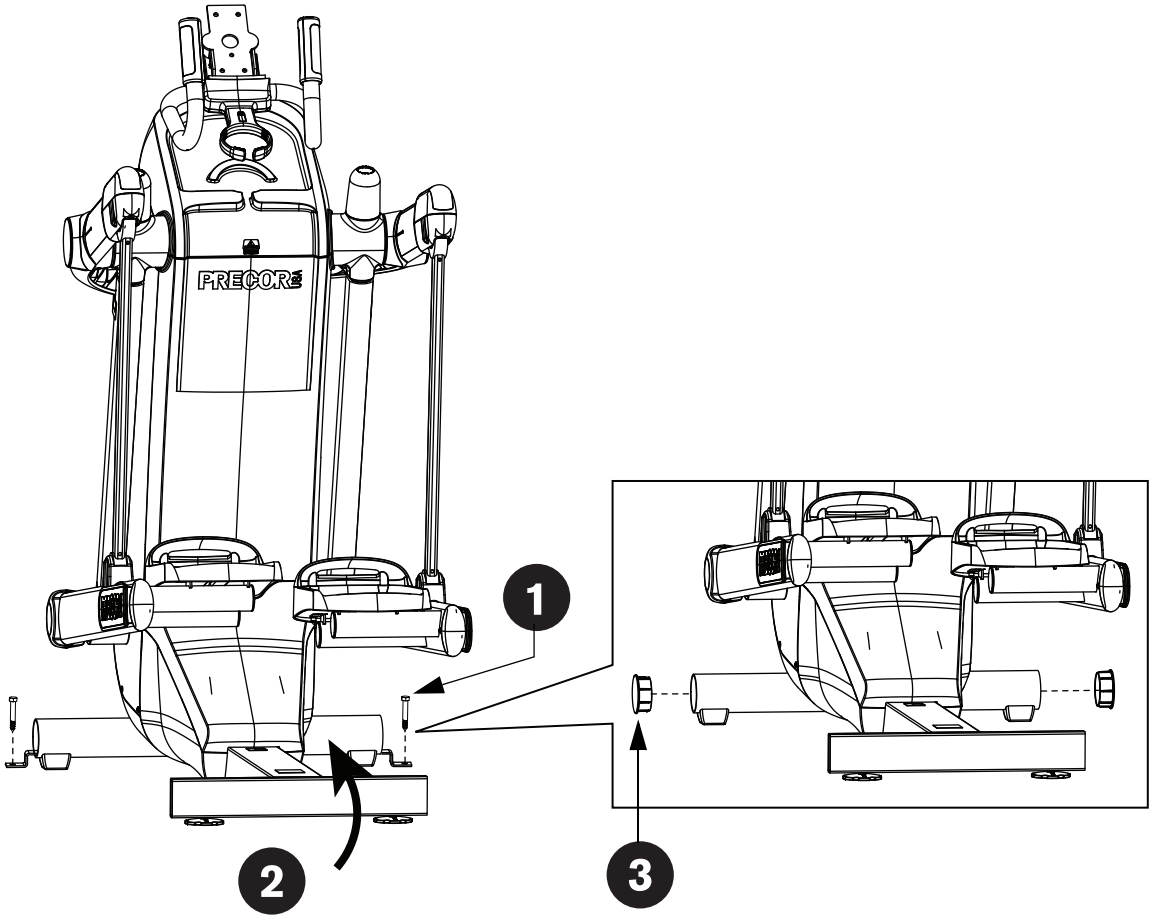

1. Remove the two side fasteners that hold the front frame tube to the shipping pallet. Cut the tie wraps that secure the rear base.

   CAUTION: Ask for an assistant to help you roll the AMT off its pallet. Also, do not install the handlebars at this time. The handlebars provide an alternative handhold and, during assembly, may cause injury due to increased foot plate movement.

2. Lift the rear base and roll the AMT forward while your assistant stabilizes the front and guides it off the pallet. Move the AMT to the location where you plan to use it.

3. Insert the end caps (E) into the front frame tube. Align the end caps and, if necessary, use a rubber mallet to secure them in place.

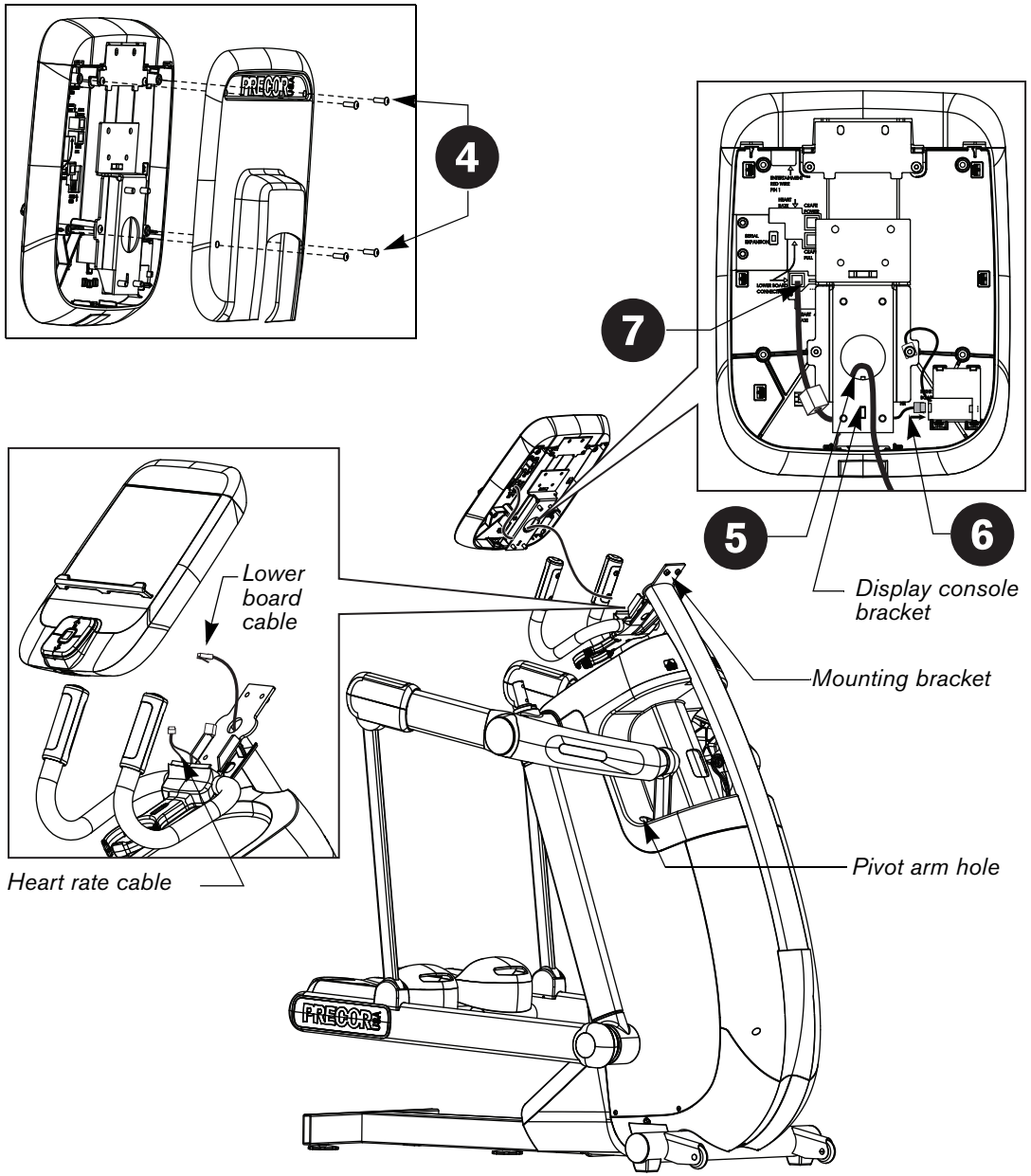

Important: *Temporarily cover the pivot arm holes on the front covers with packing material so fasteners or tools do not inadvertently fall inside.*

4. Use a Phillips-head screwdriver to remove the four screws that secure the back console plate to the display console. Set the fasteners and cover aside.

5. Hold the display console above its mounting bracket on the AMT. Feed the lower board cable through the hole and out the base of the display console bracket.

6. Connect the heart rate cable to the 4-prong receptacle on the electronics board.

   Important: *Make sure to move the lower board and heart rate cables out of the way as you place the display console onto its mounting bracket.*

7. Connect the lower board (RJ45) cable to its receptacle.

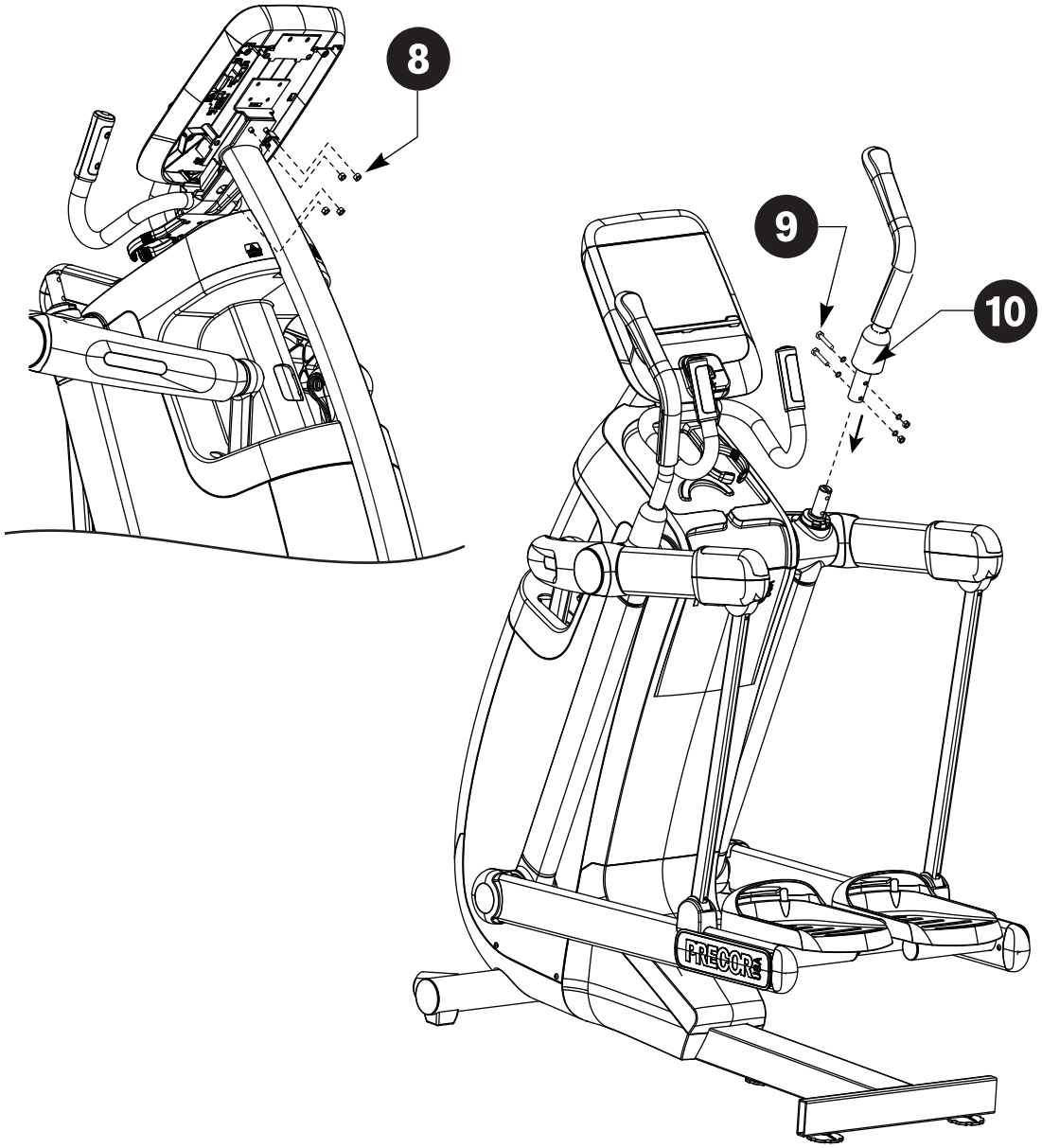

8 Thread four locknuts (A) onto the bolts to secure the display console onto its bracket. Wrench tighten using a ½-inch socket wrench.

9 Slide a plastic boot (D) onto each handlebar. As you face the display, note which handlebar mounts on the right and on the left pivot arm stubs. Attach the handlebars using four 1¾-inch hex head screws (B), eight washers (C), four locknuts (A). Wrench tighten.

Note: When the handlebars are mounted correctly, each bends slightly outward.

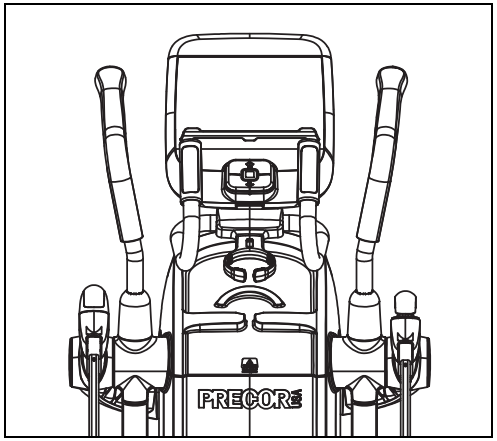

10 Cover the fasteners with a plastic boot. Rotate the plastic boot so its tab aligns with the cutout. Apply downward pressure to secure the plastic boots in place.

11 Level the AMT.

Before allowing users on the AMT, make sure it does not wobble from side to side.

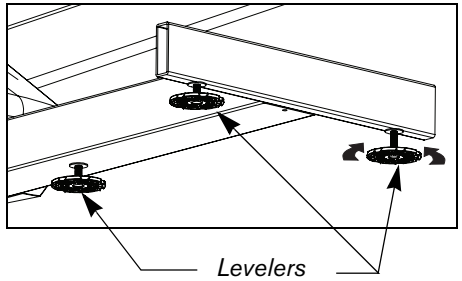

To remove any side-to-side movement, take the following steps:

1. Ask your assistant to tip the unit forward to expose the three levelers on the rear base.
2. Rotate the levelers to raise or lower the unit.

   Important: *If the unit is placed on a slightly uneven surface, rotating the levelers can help, but will not compensate for extremely uneven surfaces.*
3. When you are finished adjusting the AMT, ask your assistant to gently lower the unit to the floor.

12 Install the rear pedestal over the rear crosspiece.

Important: *The rear pedestal lays flat on the floor. It provides a mounting platform for stepping onto the AMT and also indicates the buffer zone that patrons must stay clear of when someone is using the AMT.*

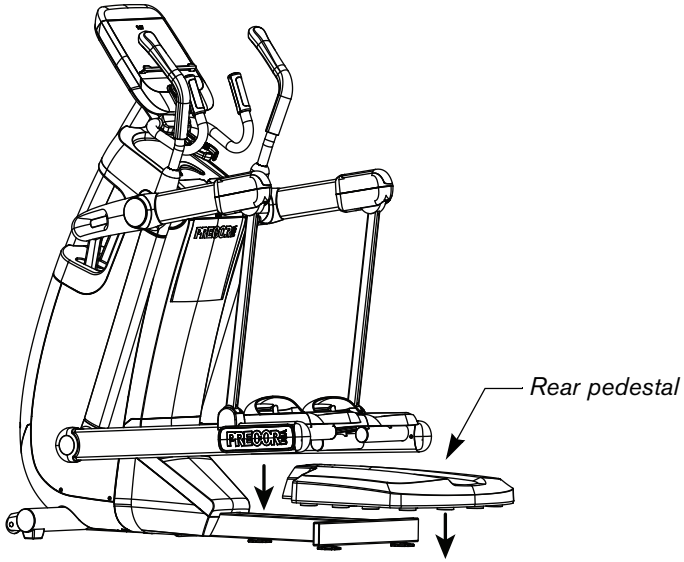

13 Verify that the heart rate display is operational.

1. Stand on the rear pedestal and face the display.
2. Place one foot in the lower foot plate and grasp an arm or a stationary handlebar for stability while you step into the other foot plate.
3. When you are comfortably situated, begin climbing.
4. Grasp both touch-sensitive handlebar grips.
5. Look at the HEART RATE display. After a few seconds, a number appears indicating your heart rate.

Note: If a number does not appear in the HEART RATE display, check the 4-prong heart rate cable to make sure it is properly connected.

14 Replace the back console plate onto the display console using the four screws removed in step 4. Secure the fasteners with a Phillips-head screwdriver.

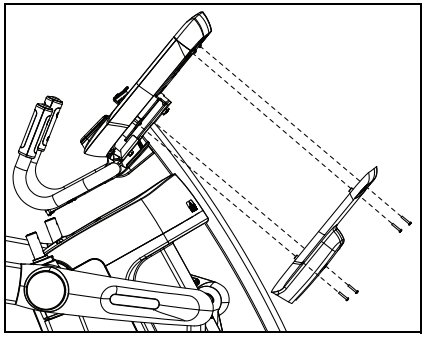

Notes:

Precor Incorporated
20031 142nd Avenue NE
P.O. Box 7202
Woodinville, WA USA 98072-4002

©2008 Precor Incorporated
www.precor.com
100i AG 49736-106, en
28 March 2008